www.yd-reducer.com

YDHN®
一鼎华耐

杭州一鼎传动机械有限公司
HANGZHOU YIDING TRANSMISSION MACHINERY CO.,LTD

地址：杭州市萧山义蓬工业园区
电话：+86 571 - 82130781 ； +86 13362171108
传真：+86 571 - 82130751
邮编：311227
网址：http://www.yd-reducer.com
邮箱：dina@yd-reducer.com

代理商

轻/松/传/动/每/一/秒

一鼎华耐减速机

YIDING HUANAI SPEED REDUCER

第IV版

国家级高新技术企业

YDHN®
一鼎华耐

我们秉承持续创新、追求卓越的精神，坚持以科技引领企业发展，全员永葆创精雕细琢的激情与活力，注重团队的学习提升，努力创造卓越绩效，不断促进企业的跨越式发展。

我们弘扬和谐共进、致力共赢的精神，重视以安全和谐为根本，注重内部胡通力协作与外部的广泛合作，实现企业发展的成果共享，共同创造企业可持续的发展环境。

企业荣誉

自我超越 共创辉煌

CORPORATE AWARES

YDHN®
一鼎华耐

品质 · 精湛

细心、精心、用心、品质、永保称心

讲究实效 完善管理 精益求精 铸造品质

BRIEF INTRODUCTION

企业简介

杭州一鼎传动机械有限公司位于钱塘江南岸，杭州萧山义蓬工业园区，交通便利，四通八达。

我公司是一家专业生产蜗轮蜗杆减速机制造型企业，一流的设备、尖端的技术和高科技人才奠定了我公司专业承揽国内外大型工程的生产实力，公司拥有一支庞大的科研队伍，不断引进国外先进技术，专业研发生产各类蜗轮蜗杆减速机。产品用于冶金、化工、起重、矿业、石油、纺织、医疗、木工等作业，本公司一贯信奉“质量第一，顾客至上，以诚会友”科技兴企。把客户的满意当做我们永恒的追求，产品远销到美国、日本、韩国及东南亚等多个地区。

公司的观念是“合作、共赢、创新、发展”我们以服务国内外客商，振兴经济和奉献社会为己任，努力做到“以人为本，以市场为导向”，真诚为广大客户提供优良的产品和诚信的服务。

COMPANG **PROFILE**

Hangzhou Yiding Transmission Machinery Co., Ltd. Located In Yipeng Industrial Park Xiaoshan in the south bank of Qiantang River, it is convenient transportation and accessible.

Our company is a professional manufacture of worm gear speed reducer, it have top-ranking equipment. cutting-edge technology and high-tech talent establish our company have a specialized producing capacity for large-scale projests at home and abroad. We have a large research team, constantly introduces advanced technology from abroad to develop and produce kinds of worm speed reducer. Our products are widely usded in many area such as metallurgy, chemical industry, hoisting, mine, petroleum, textile, medical treatment and woodworking, etc. Company believed in "quality first, customers first, sincere friends"to make sure science and technology enterprise. Satisfying clients is our eternal pursuit. Our products are exported to USA, Japan, Korea and Southeast Asia, etc.

The company's concept is "cooperation, win-win, innovation and development," we glad to serve at home and abroad, to revitalize the economy and contributing for society as our responsibility, Insisted on" people-oriented, market-oriented", Sincerely to provide our customers with excellent products and the integrity of service.

Understand 了解我们 Us

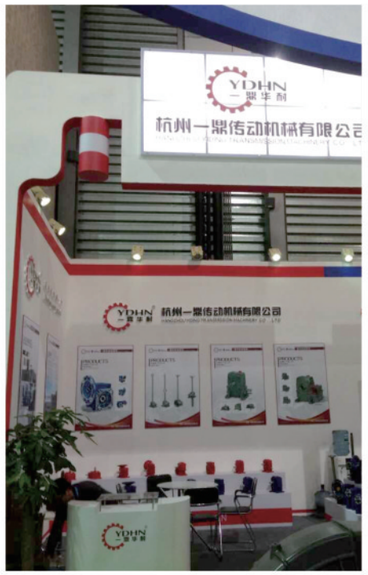

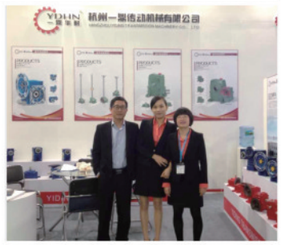

拥有高精度的数控机床和加工中心，先进的设备及检测仪器，精良的工艺以及严格完善的质量管理体系，并聚集具有专业技术的精英和领先水平的科技队伍，充分利用新技术、新工艺、新材料保证产品的稳定性和可靠性产品质量，取源于制造手段的先进、精品意识源于不断的创新。

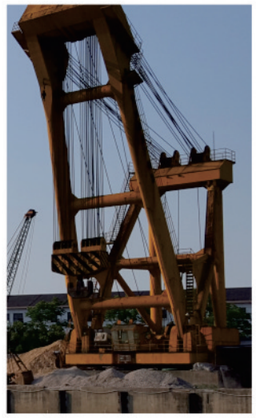

我们拥有行业领先的自动化制造设备,为零部件精度的不断提升给于持续的支持。
We has advanced automatic producing equipments which gives the continuous support to improving the precision of spare parts.

我们拥有先进而完善的检验设备,为零件及整机作精密的检测。
We have advanced and perfect inspecting equipment to inspect the spare parts and whole machine precisely.

YDHN 一鼎华耐 轻/松/传/动/每/一/秒 Drive freely every second

YDHN 一鼎华耐 轻/松/传/动/每/一/秒 Drive freely every second

CONTENTS

参数符号对应表 Parameter symbol table

P 功率 Power (kw)	m 重量 Weight (kg)	2 输出轴 Output shaft	max 最大值
M 扭力 Torque (Nm)	η 效率 Efficiency	r 径向 Radial	min 最小值
n 速度 Speed (rpm)	γ 前置角 Helix angle	a 轴向 Axial	
i 减速比 Ratio	f.s. 工作系数 Work factor	s 静态 Statical	
F 负荷 Load (N)	1 输入轴 Input shaft	d 动态 Dynamic	

产品图片
Product Picture

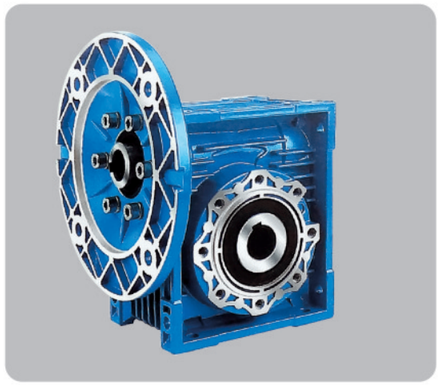

NMRV

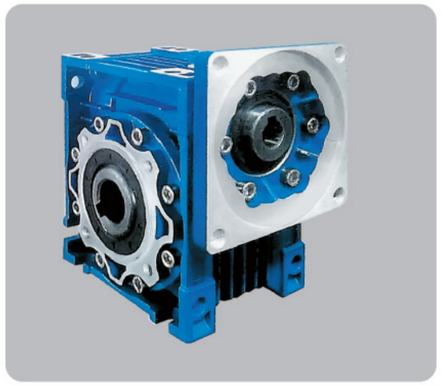

NMRV
(for servo motor)

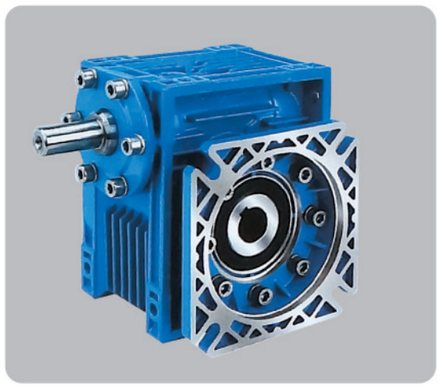

NRV..F

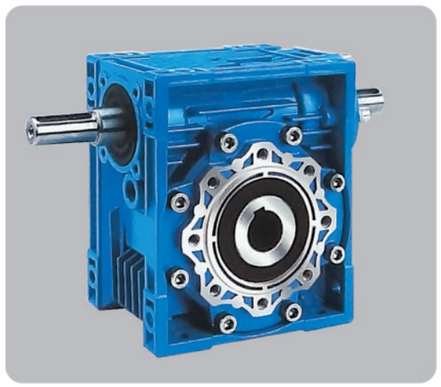

NRV..VS

YDHN 一鼎华耐 轻松传动每一秒
www.yd-reducer.com
专业蜗轮蜗杆减速机制造商
Specialized manufacturer of worm gear reducer

产品图片
Product Picture

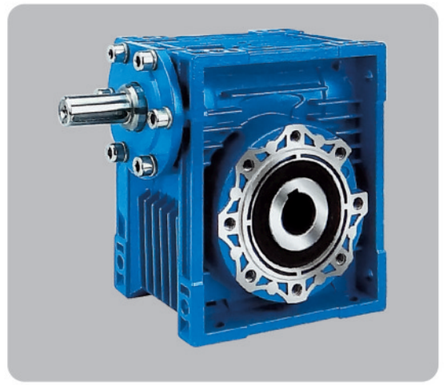

NRV

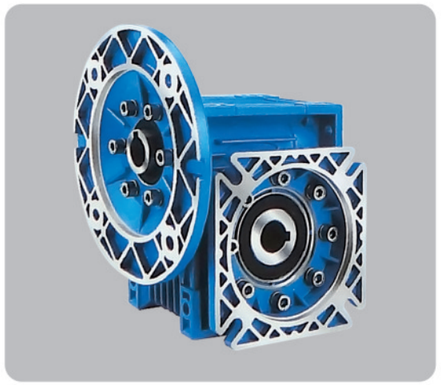

NMRV..F

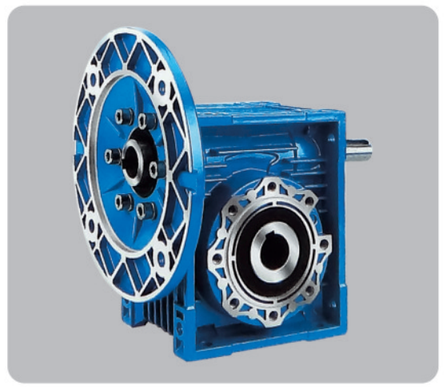

NMRV..VS

NMRV+NMRV

1. 产品结构 Products Structure

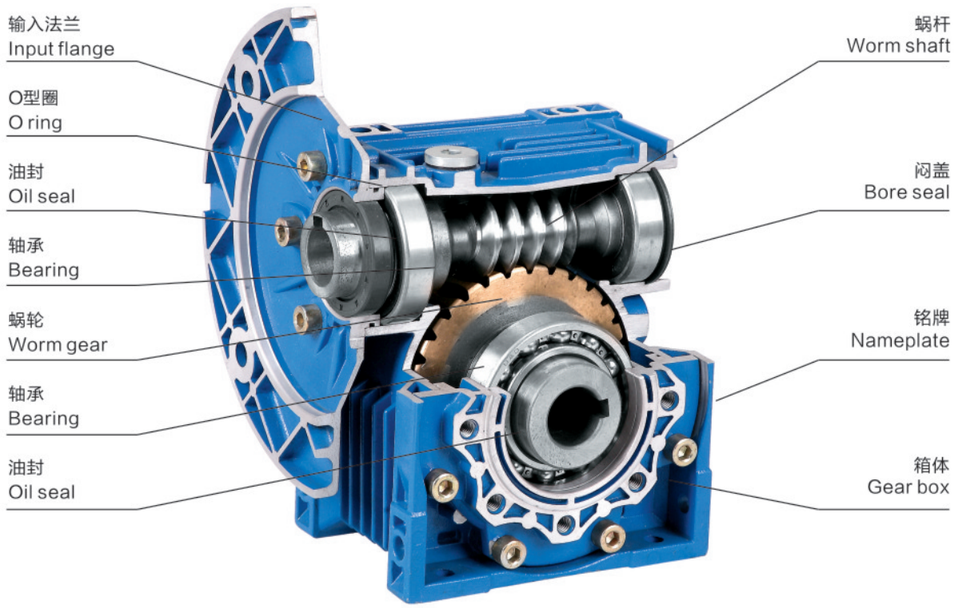

2. 型号说明 Model Instruction

2.1 NMRV 型号标记 NMRV Model

NMRV-063-30-VS-F1(FA)-AS-80B5-0.75kW-B3			
NMRV	蜗轮减速器 Worm Reducer		
NRV	蜗轮减速器 (配接输入轴) Worm Reducer (With input shaft)		
063	蜗轮减速器中心距 Center Dictance		
30	减速比 Reduction ratio		
VS	双向输出轴 Double input shaft	F1(FA)	输出法兰位置及型号 Output flange
AS	单向输轴 Single output shaft	AB	双向输出轴 Double output shaft
PAM	电机连接 Electrical motor connection	80B5	电机机座号和安装结构形式 Motor mounting facility
0.75kW	电机攻率 Electric motor power	B3	安装方位 Mounting position

2.2 入力轴和输出法兰指向图 Directions of input shaft & output flange

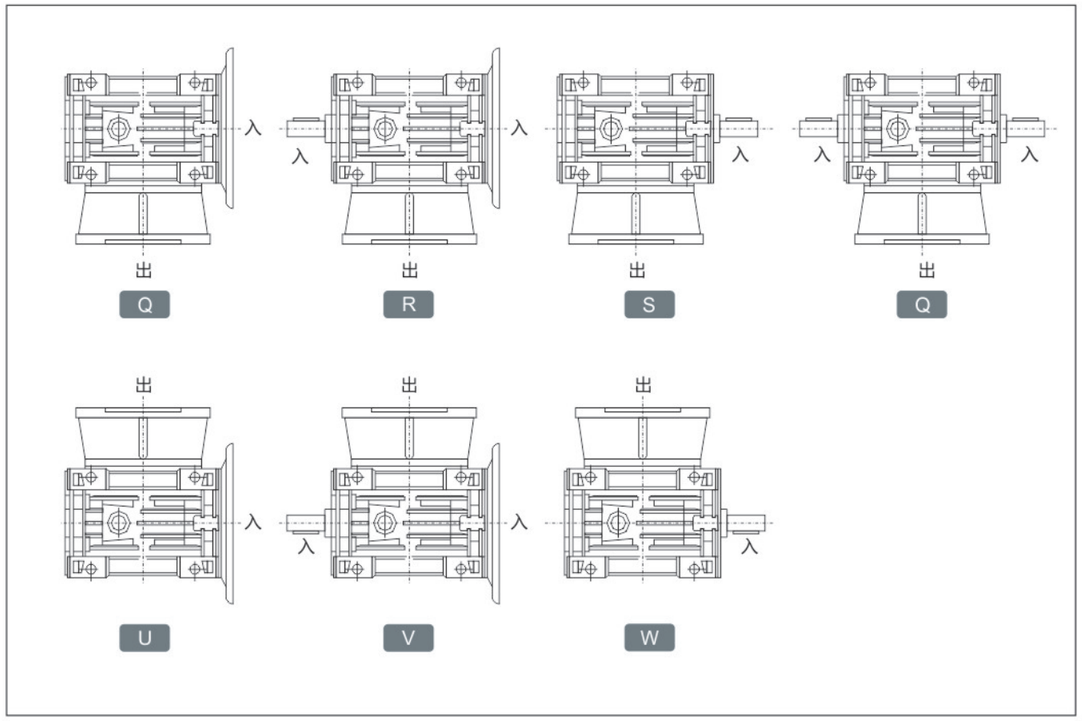

2.3 单级安装形式 Single Step Mounting Positions

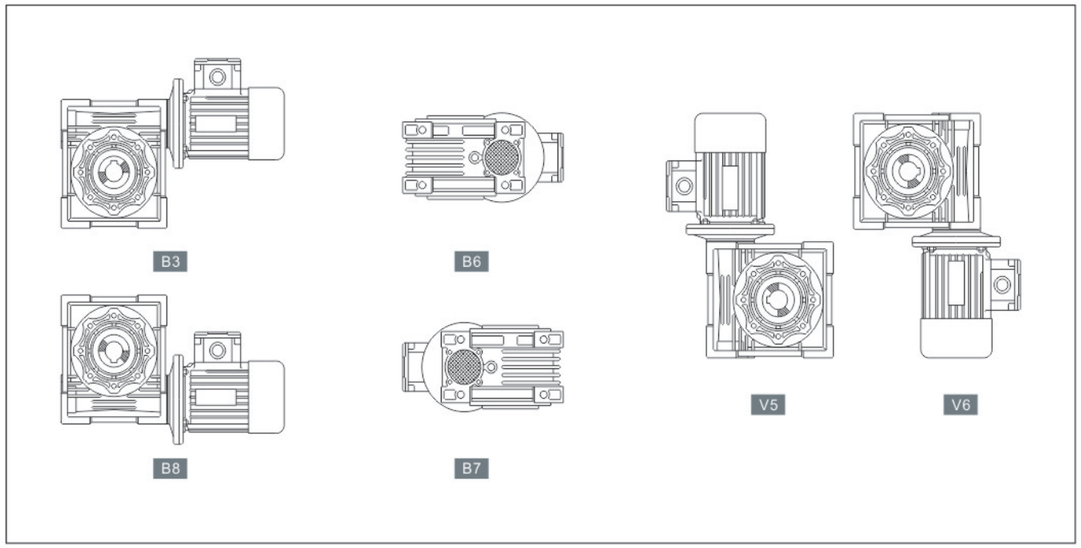

2.4 双级安装形式 Double Step Mounting Positions

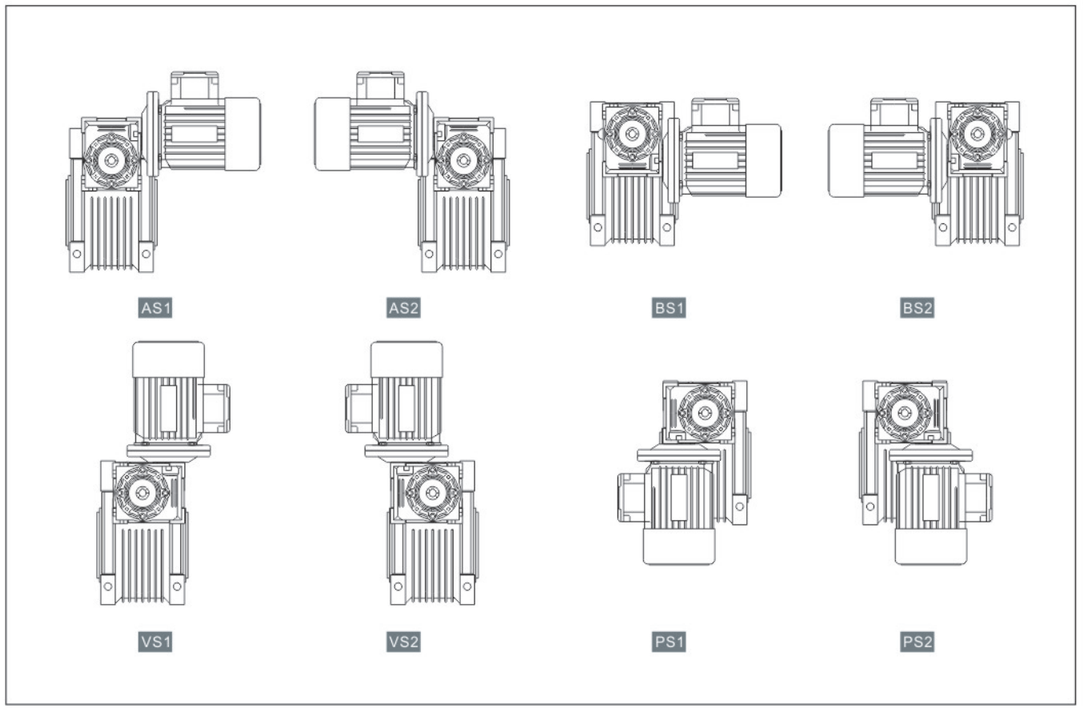

2.5 接线盒安装方式 Pos.of terminal box

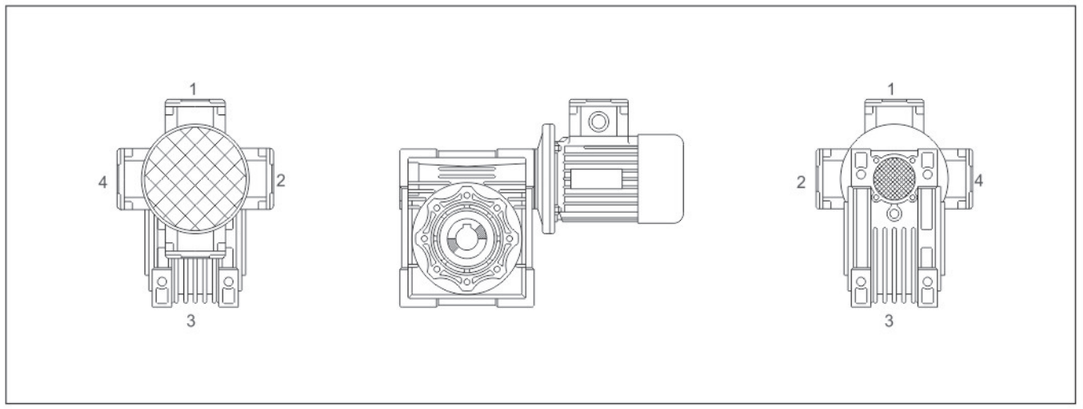

3. 安装尺寸 Mounting dimensions

3.1 单级蜗杆减速机 Single Step Worm Gear Reducer

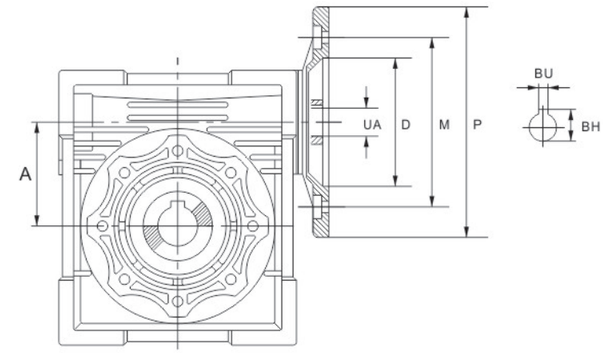

电机输入法兰 Motor Input Flange

中心轴 Center Distance A	电机法兰 Motor Flange						输入轴孔直径 UA The Hole Diameter of Shaft										
	PAM	D	M	P	BU	BH	传动比 i Transmission Ratio										
	IEC						7.5	10	15	20	25	30	40	50	60	80	100
25	56B14	50	65	80	3	10.4	9	9	9	9	9	9	9	9	9	9	–
30	63B5	95	115	140	4	12.8	11	11	11	11	11	11	11	11	11	11	–
	63B14	60	75	90													
	56B5	80	100	120	3	10.4	9	9	9	9	9	9	9	9	9	9	–
	56B14	50	65	80													
40	71B5	110	130	160	5	16.3	14	14	14	14	14	14	14	14	14	14	14
	71B14	70	85	105													
	63B5	95	115	140	4	12.8	11	11	11	11	11	11	11	11	11	11	–
	63B14	60	75	90													
	56B5	80	100	120	3	10.4	9	9	9	9	9	9	9	9	9	9	9
50	80B5	130	165	200	6	21.8	19	19	19	19	19	19	19	19	19	19	19
	80B14	80	100	120													
	71B5	110	130	160	5	16.3	14	14	14	14	14	14	14	14	14	14	–
	71B14	70	85	105													
	63B5	95	115	140	4	12.8	11	11	11	11	11	11	11	11	11	11	11
63	90B5	130	165	200	8	27.3	24	24	24	24	24	24	24	24	24	24	24
	90B14	95	115	140													
	80B5	130	165	200	6	21.8	19	19	19	19	19	19	19	19	19	19	19
	80B14	80	100	120													
	71B5	110	130	160	5	16.3	14	14	14	14	14	14	14	14	14	14	14
	71B14	70	85	105													
75	100/112B5	180	215	250	8	31.3	28	28	28	28	28	28	28	28	28	28	28
	100/112B14	110	130	160													
	90B5	130	165	200	8	27.3	24	24	24	24	24	24	24	24	24	24	24
	90B14	95	115	140													
	80B5	130	165	200	6	21.8	19	19	19	19	19	19	19	19	19	19	19
	80B14	80	100	120													
90	100/112B5	180	215	250	8	31.3	28	28	28	28	28	28	28	28	28	28	28
	100/112B14	110	130	160													
	90B5	130	165	200	8	27.3	24	24	24	24	24	24	24	24	24	24	24
	90B14	95	115	140													
	80B5	130	165	200	6	21.8	19	19	19	19	19	19	19	19	19	19	19
	80B14	80	100	120													
110	132B5	230	265	300	10	41.1	38	38	38	38	38	38	38	38	38	38	38
	100/112B5	180	215	250	8	31.3	28	28	28	28	28	28	28	28	28	28	28
	90B5	130	165	200	8	27.3	24	24	24	24	24	24	24	24	24	24	24
130	132B5	230	265	300	10	41.1	38	38	38	38	38	38	38	38	38	38	38
	100/112B5	180	215	250	8	31.3	28	28	28	28	28	28	28	28	28	28	28
150	160B5	250	300	350	12	45.3	42	42	42	42	42	42	42	42	42	42	42
	132B5	230	265	300	10	41.3	38	38	38	38	38	38	38	38	38	38	38
	100/112B5	180	215	250	8	31.3	28	28	28	28	28	28	28	28	28	28	28

3.1减速机外形尺寸 Dimensions of gear box

NMRV025

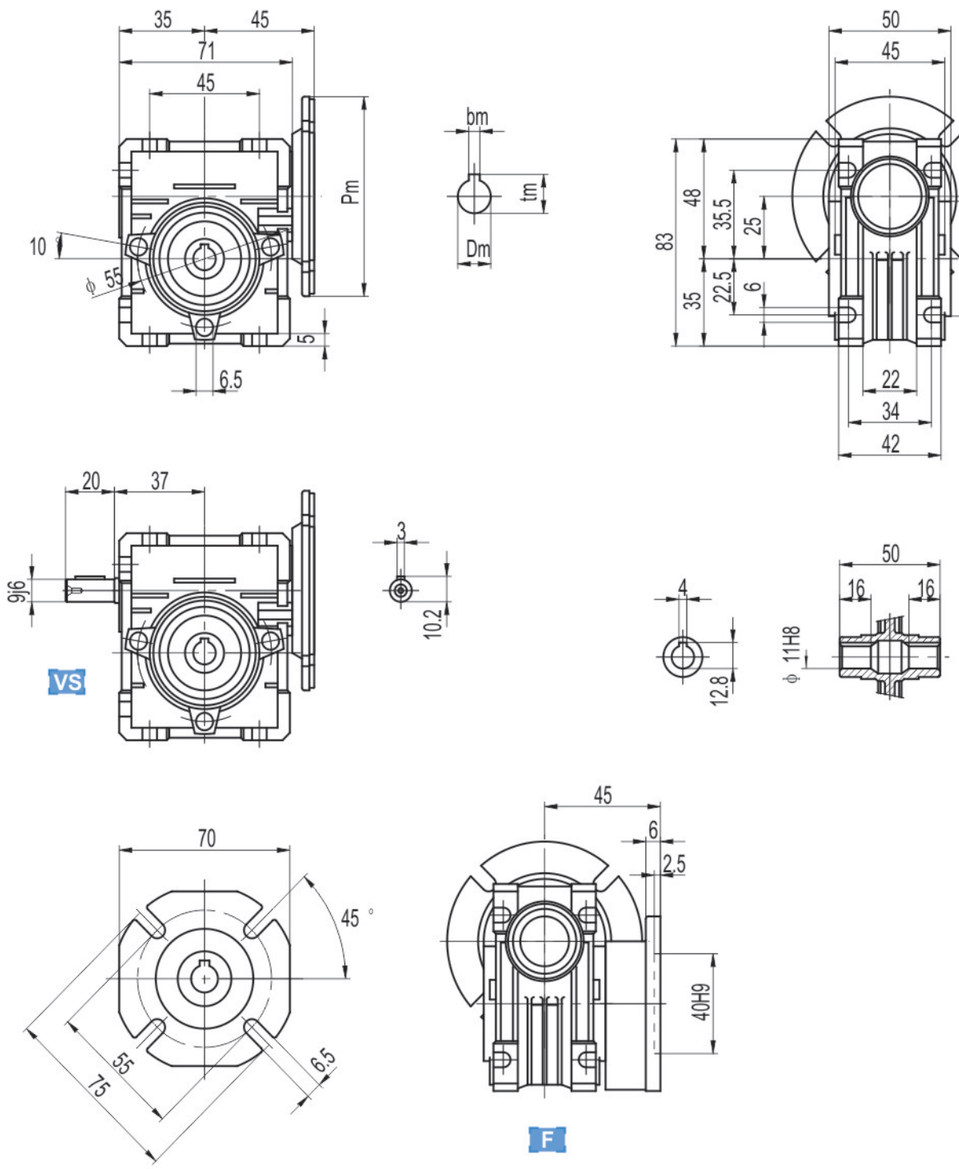

* 不带电机重量为 :0.7kg
* 输入尺寸 (Pm,Dm,bm,tm)
* Weight without motor:0.7kg
* input size (Pm,Dm,bm,tm)

YDHN 鼎华耐 轻松传动每一秒 www.yd-reducer.com
专业蜗轮蜗杆减速机制造商 Specialized manufacturer of worm gear reducer

NMRV030

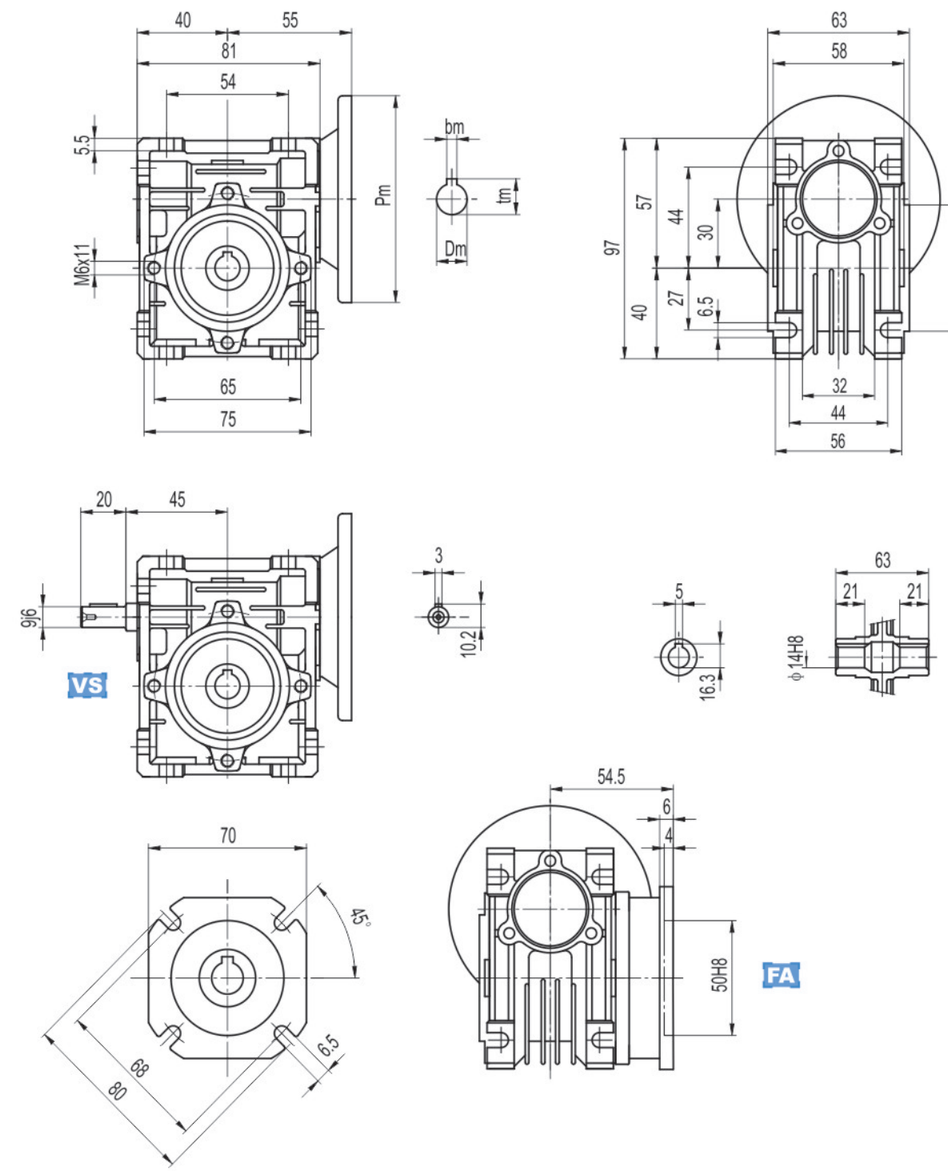

* 不带电机重量为:1.2kg
* 输入尺寸 (Pm,Dm,bm,tm)
* Weight without motor:1.2kg
* input size (Pm,Dm,bm,tm)

NMRV040

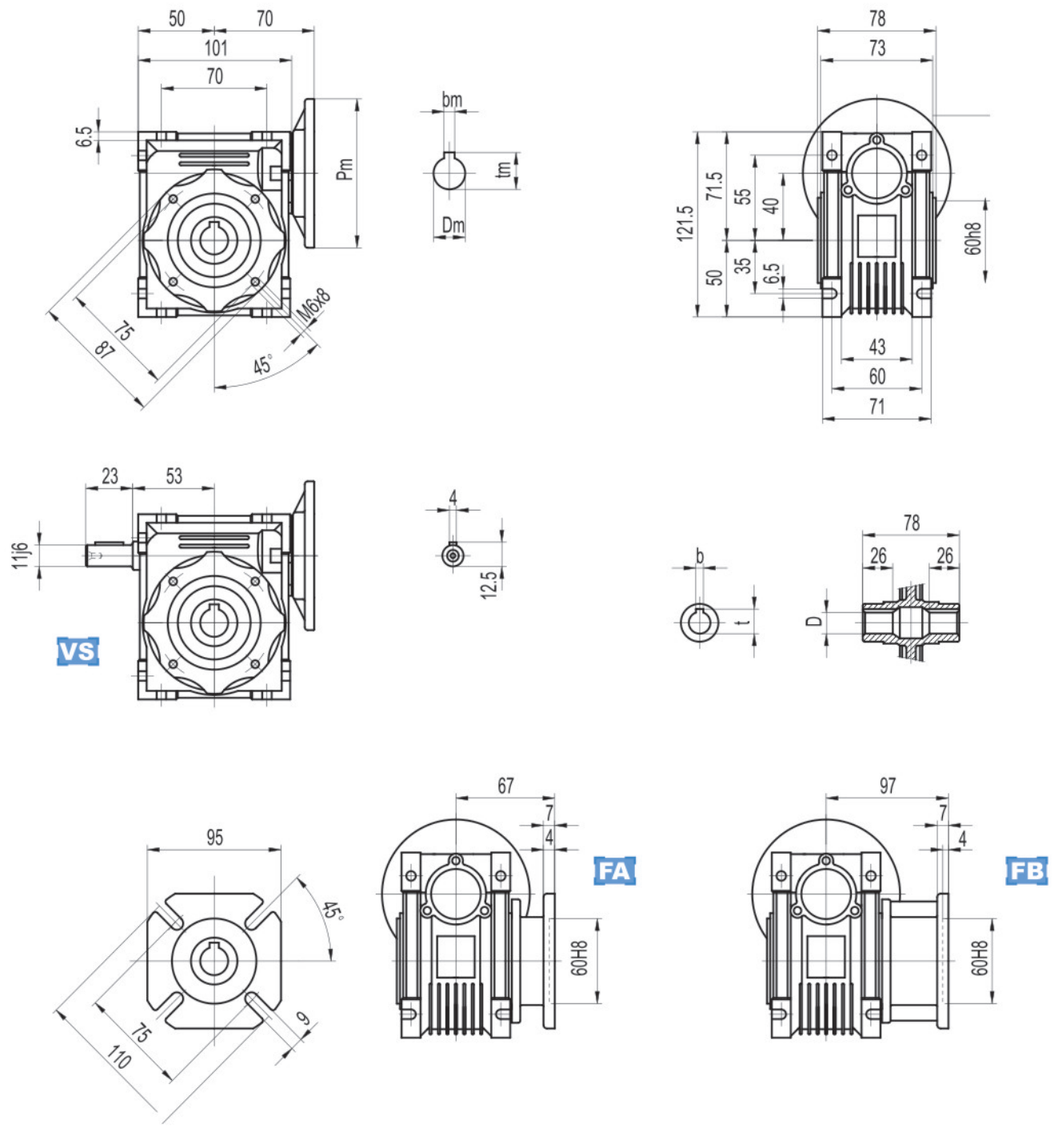

输出/Output		
D H8	b	t
18 (19)	6 (6)	20.8 (21.8)

(..)根据用户要求定制
* 不带电机重量为:2.3kg
* 输入尺寸 (Pm,Dm,bm,tm)
(..)Only on request
* Weight without motor:2.3kg
* input size (Pm,Dm,bm,tm)

YDHN 一鼎华耐 轻松传动每一秒 www.yd-reducer.com
专业蜗轮蜗杆减速机制造商 Specialized manufacturer of worm gear reducer

NMRV050

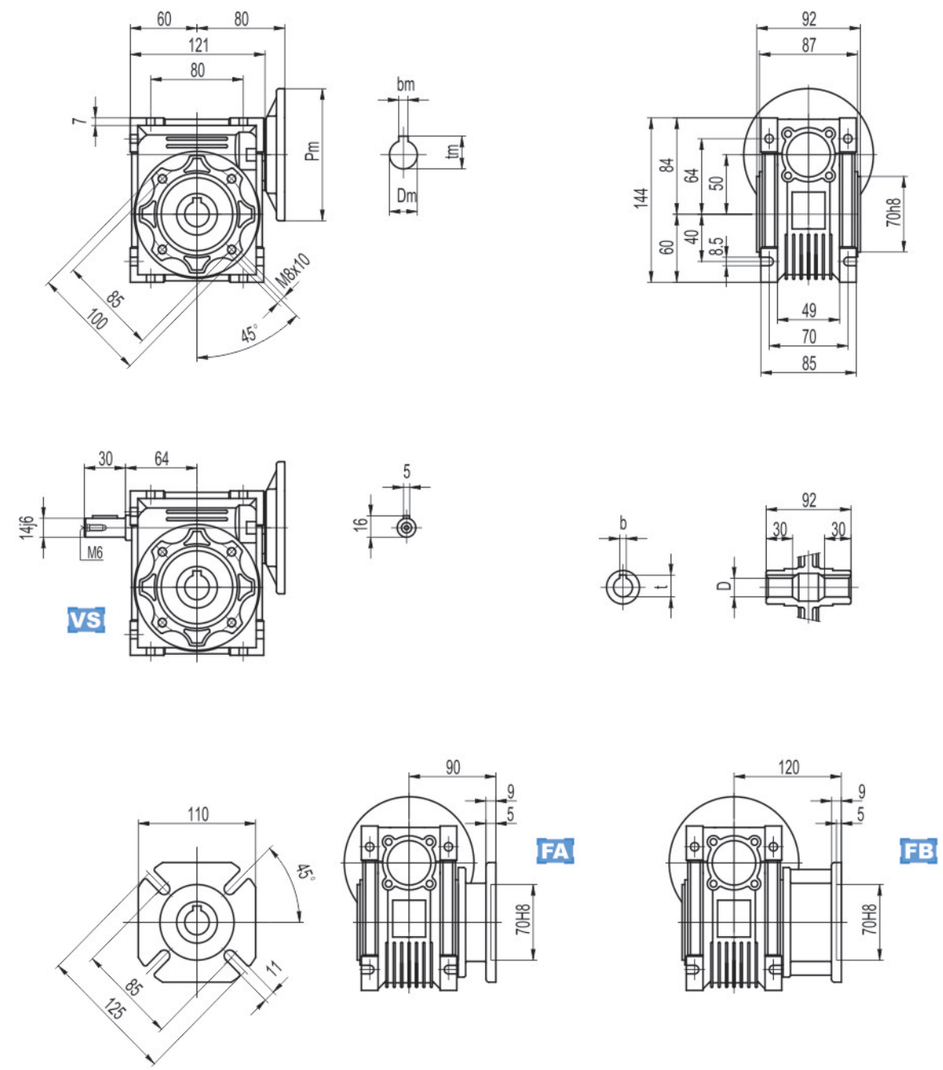

输出/Output		
D H8	b	t
25 (24)	8 (8)	28.3 (27.3)

(..)根据用户要求定制
* 不带电机重量为:3.5kg
* 输入尺寸 (Pm,Dm,bm,tm)
(..)Only on request
* Weight without motor:3.5kg
* input size (Pm,Dm,bm,tm)

NMRV063

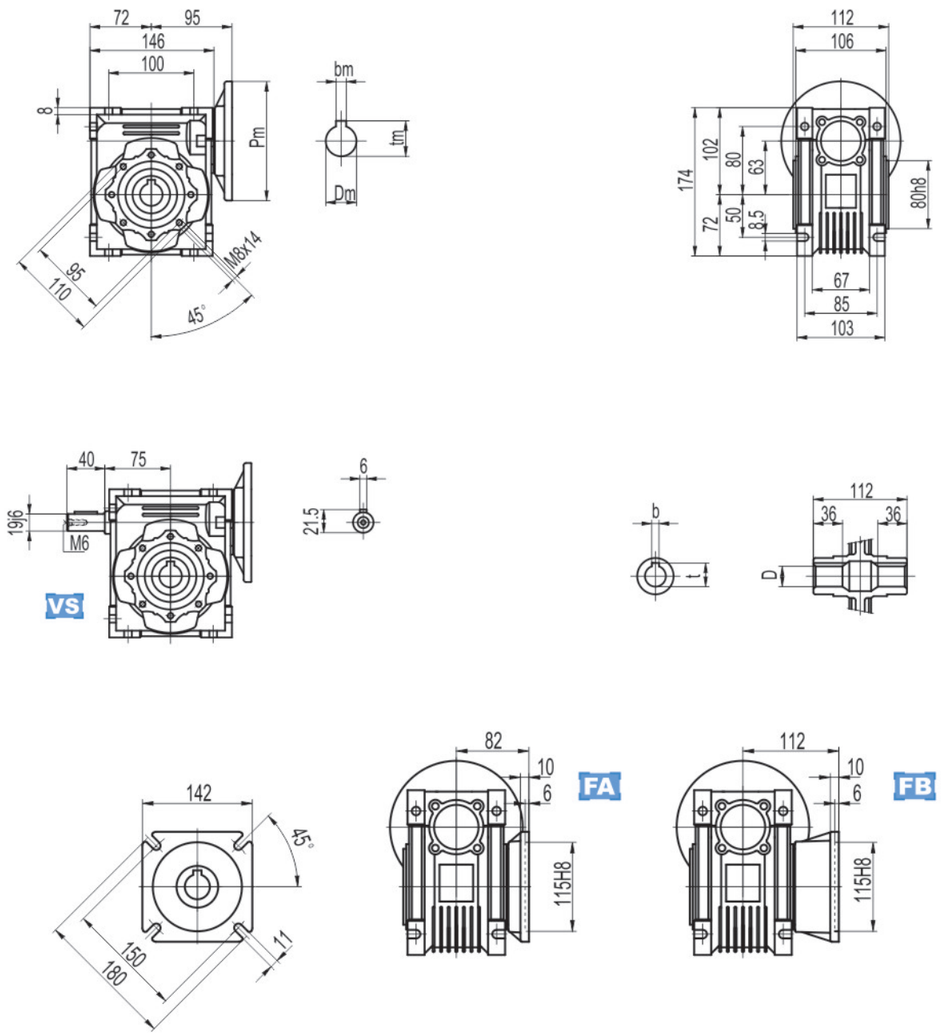

输出/Output		
D H8	b	t
25 (28)	8 (8)	28.3 (31.3)

(..)根据用户要求定制
* 不带电机重量为:6.2kg
* 输入尺寸 (Pm,Dm,bm,tm)
(..)Only on request
* Weight without motor:6.2kg
* input size (Pm,Dm,bm,tm)

YDHN 鼎华耐 轻松传动每一秒 www.yd-reducer.com
专业蜗轮蜗杆减速机制造商 Specialized manufacturer of worm gear reducer

NMRV075

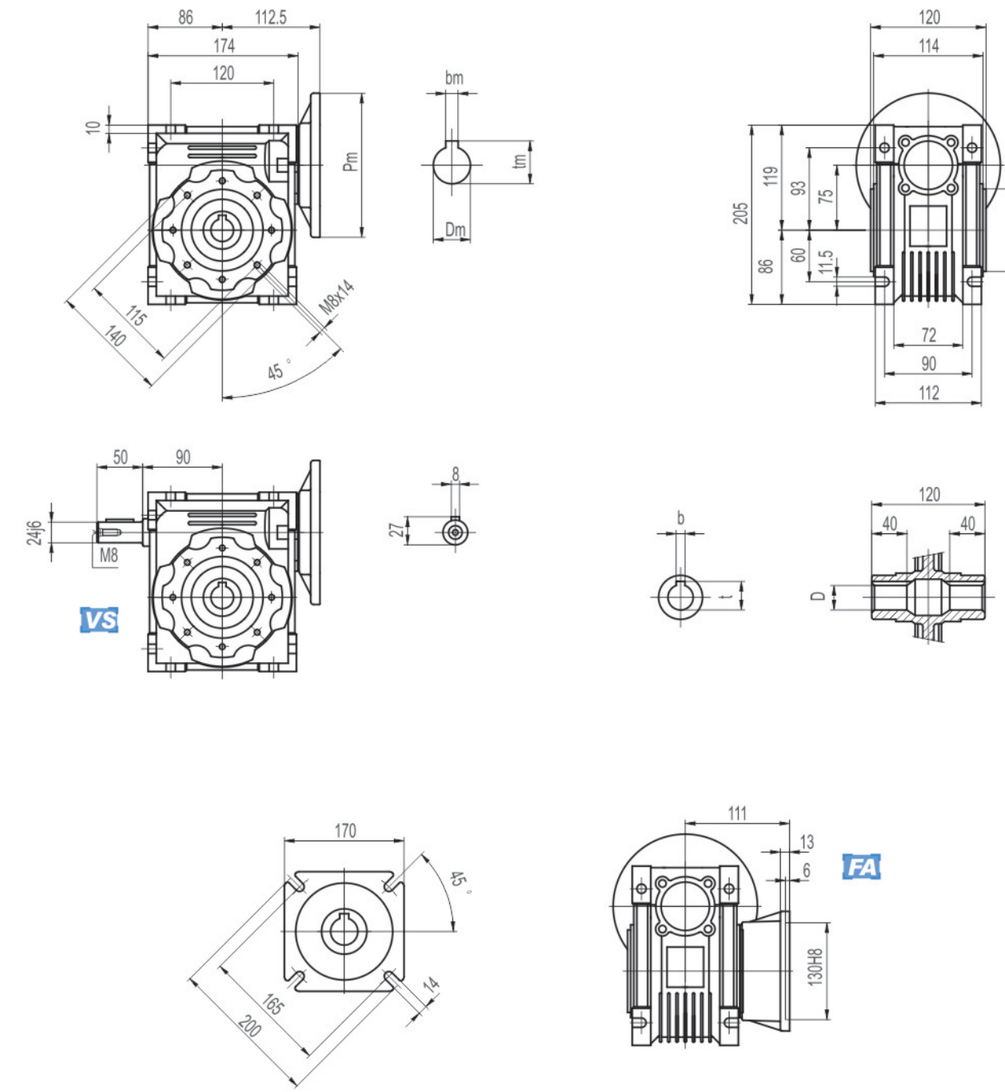

输出 /Output		
D H8	b	t
28 (35)	8 (10)	31.3 (38.3)

(..) 根据用户要求定制
* 不带电机重量为 :9kg
* 输入尺寸 (Pm,Dm,bm,tm)
(..)Only on request
* Weight without motor:9kg
* input size (Pm,Dm,bm,tm)

NMRV090

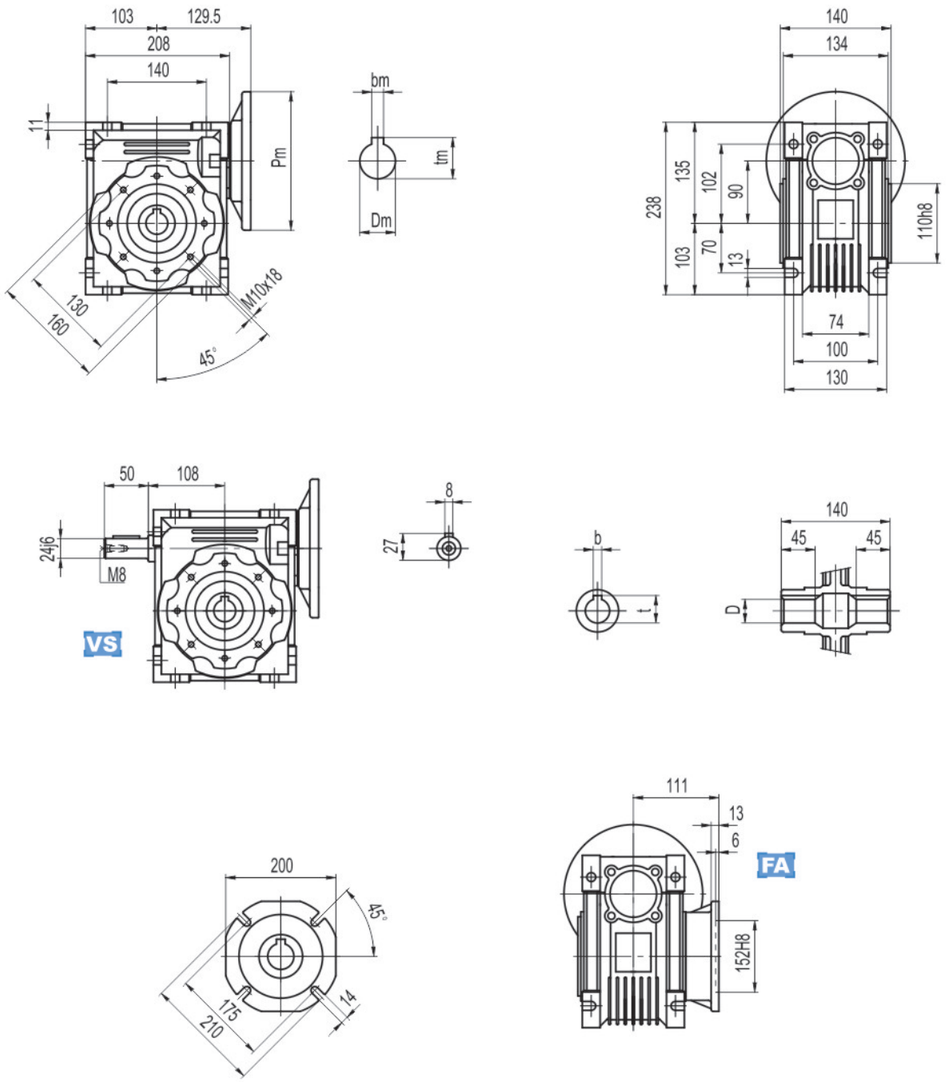

输出/Output		
D H8	b	t
35 (38)	10 (10)	38.3 (41.3)

(..)根据用户要求定制
* 不带电机重量为:13kg
* 输入尺寸（Pm,Dm,bm,tm）
(..)Only on request
* Weight without motor:13kg
* input size (Pm,Dm,bm,tm)

YDHN 鼎华耐 轻松传动每一秒 www.yd-reducer.com
专业蜗轮蜗杆减速机制造商 Specialized manufacturer of worm gear reducer

NMRV110

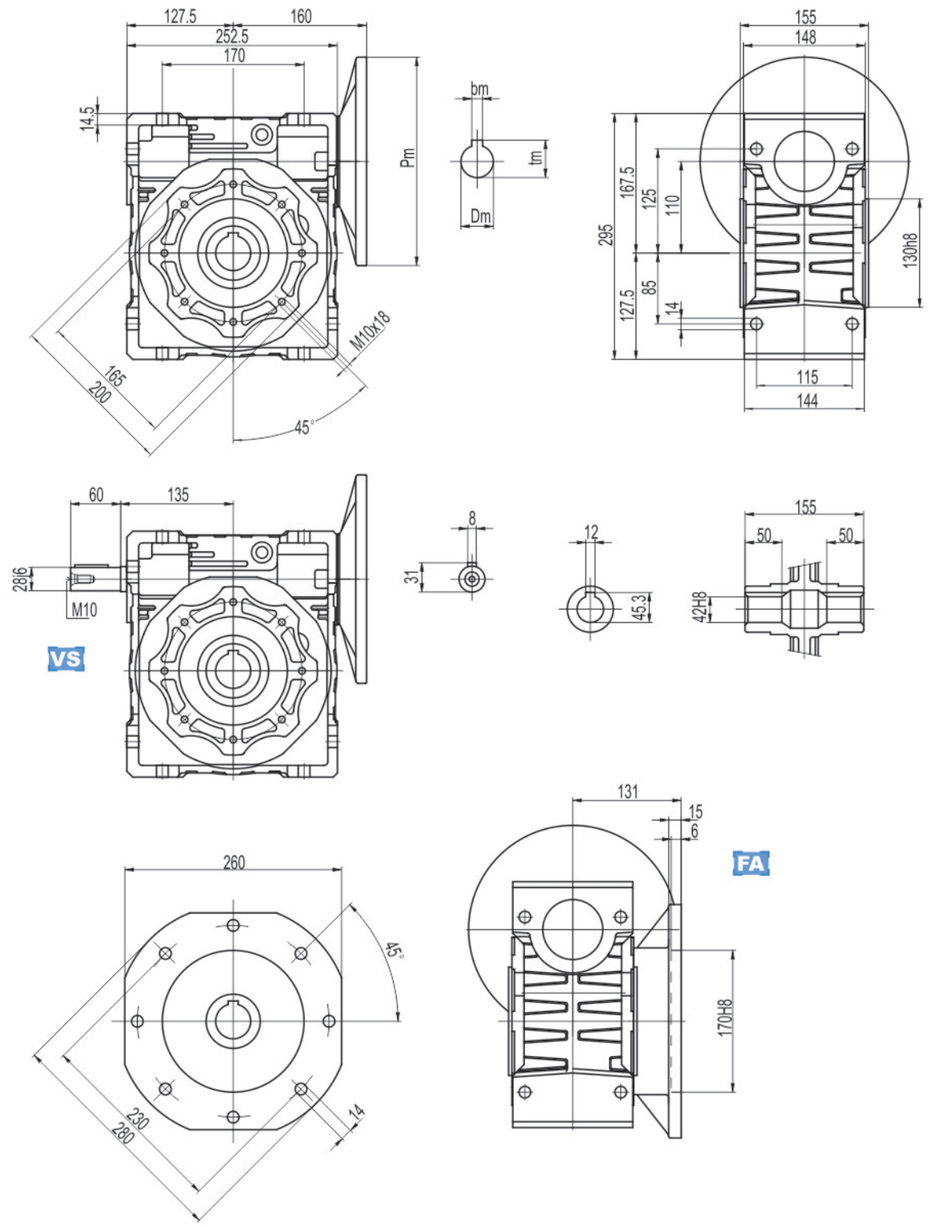

* 不带电机重量为:35kg
* 输入尺寸（Pm,Dm,bm,tm）
* Weight without motor:35kg
* input size (Pm,Dm,bm,tm)

NMRV130

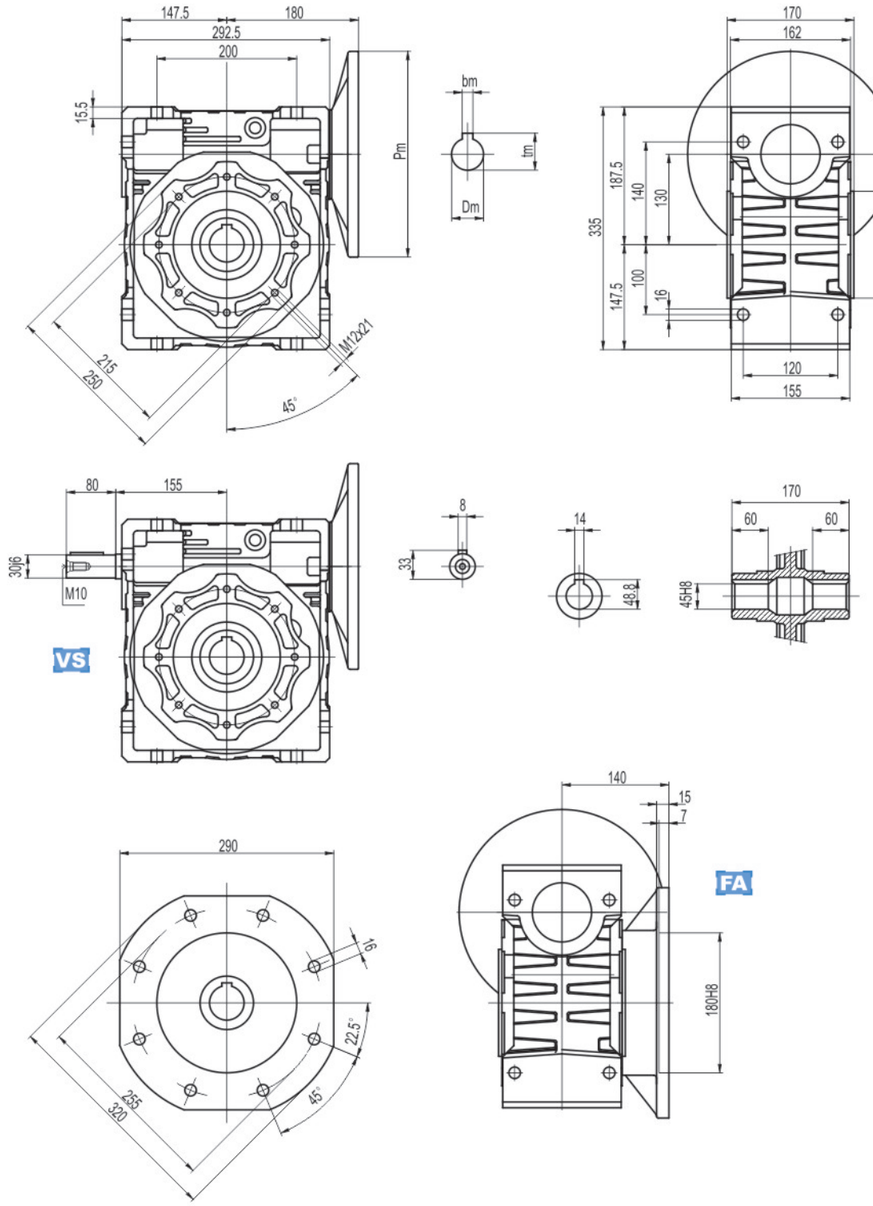

* 不带电机重量为:48kg
* 输入尺寸（Pm,Dm,bm,tm）
* Weight without motor:48kg
* input size (Pm,Dm,bm,tm)

YDHN 鼎华耐 轻松传动每一秒 www.yd-reducer.com
专业蜗轮蜗杆减速机制造商 Specialized manufacturer of worm gear reducer

NMRV150

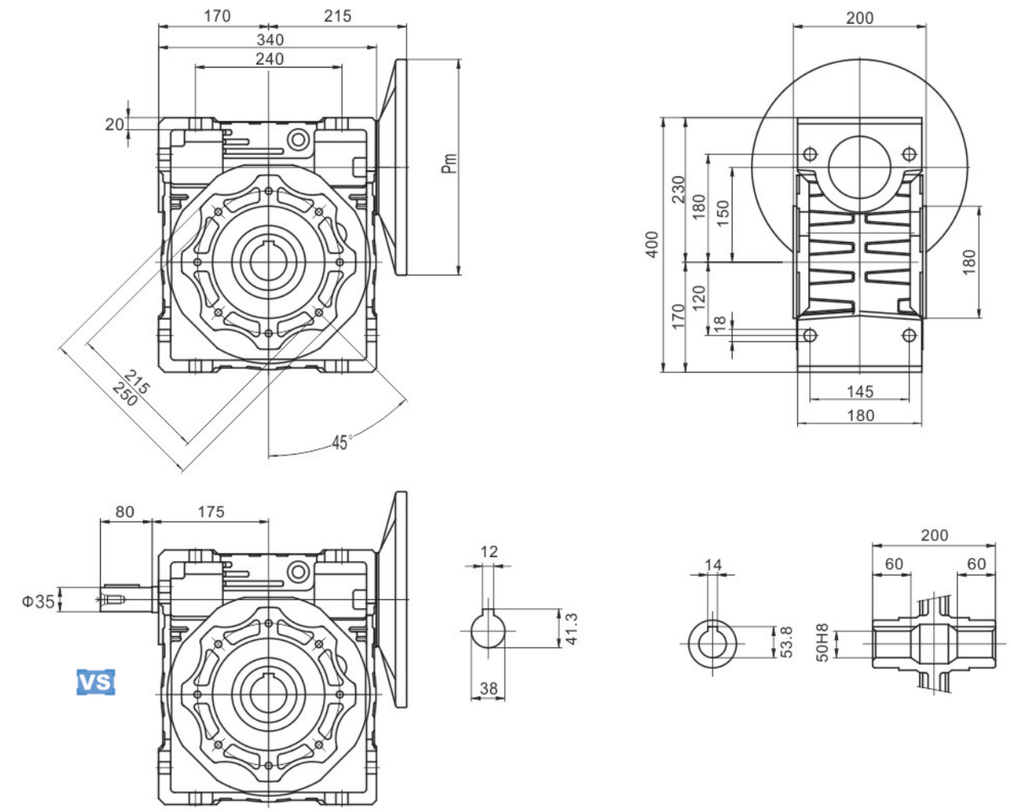

* 不带电机重量为:87.8kg
* 输入尺寸（ Pm,Dm,bm,tm ）
* Weight without motor:87.8kg
* input size (Pm,Dm,bm,tm)

输出法兰安装尺寸 Output Flange Mounting Dimensions

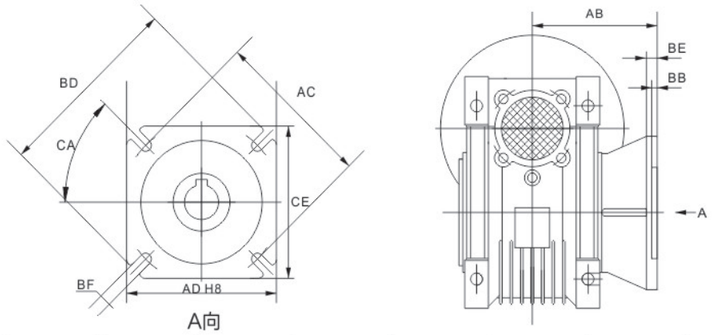

	25	30	40	50	63	75	90	110	130	150
AB	45	54.5	67	90	82	102	111	131	140	155
AC	55	68	80	85	150	165	175	230	255	255
AD	40	50	60	70	115	130	152	170	180	180
BB	3	4	4	5	6	6	6	6	6	7
BD	75	80	110	125	180	200	210	280	320	320
BE	6	6	7	9	10	13	13	15	15	15
BF	6.5(n.4)	6.5(n.4)	9(n.4)	11(n.4)	11(n.4)	14(n.4)	14(n.4)	Φ14(n.8)	Φ16(n.8)	Φ16(n.8)
CA	45°	45°	45°	45°	45°	45°	45°	45°	22.5°	22.5°
CE	70	70	95	110	142	170	200	260	290	290

NMRV(VS) 安装尺寸 NMRV(VS) Mounting Dimensions

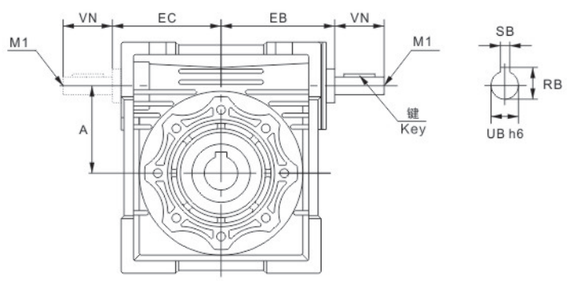

	30	40	50	63	75	90	110	130	150
A	30	40	50	63	75	90	110	130	150
EB	50	61	74	90	105	125	142	162	195
EC	45	53	64	75	90	108	135	155	175
M1	–	–	M6	M6	M8	M8	M10	M10	M12
RB	10.2	12.5	16	21.5	27	27	31	33	33
SB	3	4	5	6	8	8	8	8	10
UB	9	11	14	19	24	24	28	30	35
VN	20	23	30	40	50	50	60	80	80
输入轴平键									
规格	3x3	4x4	5x5	6x6	8x7	8x7	8x7	8x7	10x8
长度	15	20	25	35	45	45	55	70	70

3.2 双级蜗杆减速机 Double Step Worm Gear Reducer

NMRV(D) 安装尺寸 NMRV(D) Mounting Dimensions

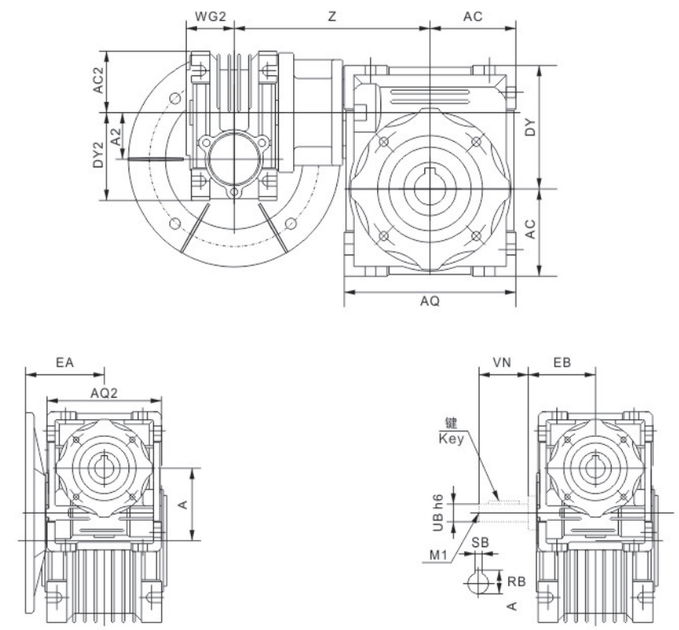

	25/30	25/40	30/40	30/50	30/63	40/75	40/90	50/110	63/130	63/150
A	30	40	40	50	63	75	90	110	130	150
A2	25	25	30	30	30	40	40	50	63	63
AC	40	50	50	60	72	86	103	127.5	147.5	170
AC2	35	35	40	40	40	50	50	60	72	72
AQ	80	100	100	120	144	172	206	252.5	292.5	340
AQ2	70	70	80	80	80	100	100	120	144	144
DY	57	71	71	84	102	119	135	167.5	187.5	230
DY2	48	48	57	57	57	71	71	84	102	102
EA	45	63	63	63	63	71	71	80	95	95
EB	–	–	50	50	50	61	61	74	90	90
M1	–	–	–	–	–	–	–	M6	M6	M6
RB	–	–	10.2	10.2	10.2	12.5	12.5	16	21.5	21.5
SB	–	–	3	3	3	4	4	5	6	6
UB	–	–	9	9	9	11	11	14	19	19
VN	–	–	20	20	20	23	23	30	40	40
WG2	22.5	22.5	29	29	29	36.5	36.5	43.5	53	53
Z	100	115	122	132	145	167.5	184.5	226	245	275
输入轴平键										
规格	–	–	3x3	3x3	3x3	4x4	4x4	5x5	6x6	6x6
长度	–	–	15	15	15	20	20	25	35	35

3.3 附件 Accessories

单（AS）/ 双出轴（AB） Single & Double Output Shaft

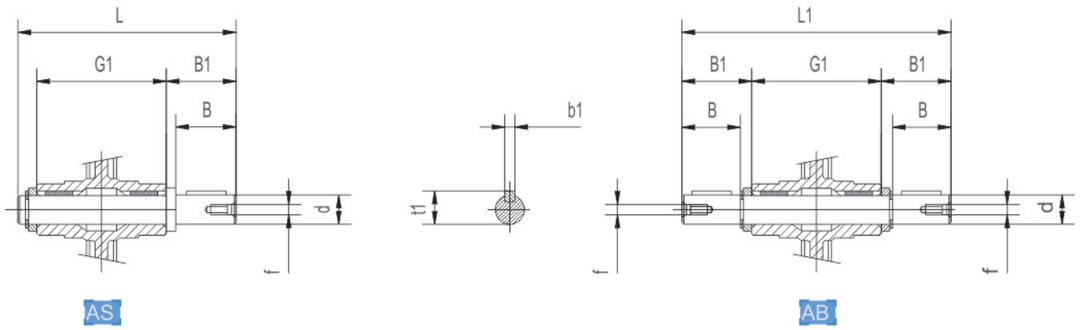

	d	B	B1	G1	L	L1	f	b1	t1
025	11g6 (9)	23 (25)	25. 5 (30)	50	81 (85. 5)	101	–	4 (3)	12. 5 (10. 2)
030	14g6	30	32. 5	63	102	128	M6	5	16
040	18h6	40	43	78	128	164	M6	6	20. 5
050	25h6	50	53. 5	92	153	199	M10	8	28
063	25h6	50	53. 5	112	173	219	M10	8	28
075	28h6	60	63. 5	120	192	247	M10	8	31
090	35h6	80	84. 5	140	234	309	M12	10	38
110	42h6	80	84. 5	155	249	324	M16	12	45
130	45h6	80	85	170	265	340	M16	14	48. 5
150	50h6	82	87	200	297	374	M16	14	53.5

保护罩 Protection cover

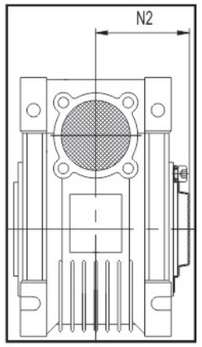

	N2
030	42
040	50
050	58
063	69
075	74
090	86
110	94
130	102
150	117

扭力臂 Torque arm

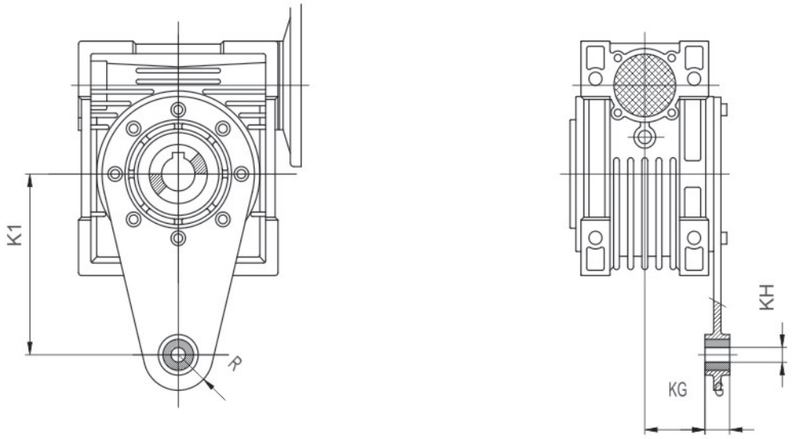

	K1	G	KG	KH	R
025	70	14	17. 5	8	15
030	85	14	24	8	15
040	100	14	31. 5	10	18
050	100	14	38. 5	10	18
063	150	14	49	10	18
075	200	25	47. 5	20	30
090	200	25	57. 5	20	30
110	250	30	62	25	35
130	250	30	69	25	35
150	250	30	84	25	35

4. 选型方法 Method for model chose

4.1 为正确选择NMRV蜗杆减速机，敬请用户首先了解以下几点：

4.1 Please understand the following at first in order to select the model of NMRV speed reducer properly:

· 负荷条件
· 使用转速范围或速比 (与双级组合可获得超低输出转速)
· 工作运转情况及环境 (温度、湿度、腐蚀等)
· 安装空间
– Loading condition.
– Speed scope or ratio in application.
– Working condition and environment.
– Installation space.

4.2 确定工作情况系数K1及工作情况修正系数K2

4.2 Define working condition Coefficient K1 and revise coefficient K2.

· 根据表1，决定机械负荷种类A.B.C
· 根据运转时间（小时/天）和启动频率（次数/小时）从图1中求得工作情况系数K1
· 根据表2，查取工作情况修正系数K2
– Ensure machinery load types A, B, C according to table 1.
– Get the working condition coefficient K1 from diagram 1 according to turning time (hour/day) and start frequency (time/hour).
– Inspect working condition and select coefficient K2 from table 2.

机械负荷种类选定（表1）
Table 1 Machinery Load classification selection

使用情况 Using situation	示范 Example	负荷种类 Load type
无冲击均匀负荷 Uniform load	传送带（匀速输送） Convey band (uniform conveying)	A（均匀负荷） A(Uniform load)
中等冲击负荷 Moderate Load	传送带（变速输送） Speed changed conveying	B（中等冲击负荷） B(Moderate load)
强烈冲击负荷 Severe Load	压缩机、粉碎机等 Compressor, pulverizer, etc	C（强冲击负荷） C(Severe load)

工作情况修正系数K2选定（表2）
Table 2 Working condition coefficient K2

环境温度 Ambient temperature	工作情况修正系数K2 Working condition coefficient K2
-10℃~30℃	1
30℃~40℃	1.1~1.2

YDHN 一鼎华耐 轻松传动每一秒 www.yd-reducer.com
专业蜗轮蜗杆减速机制造商 Specialized manufacturer of worm gear reducer

工作情况系数K1选定（图1）
Diagram 1 working Condition coefficient K1

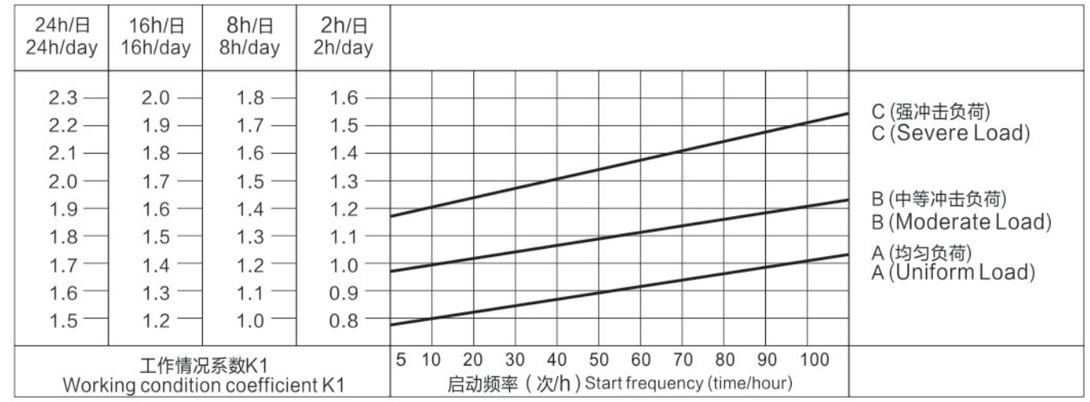

4.3 选定减速机

· 用户须先确定工作机输入机械负荷T（转矩），以T乘以工作情况系数K1，再乘以工作情况修正系数K2，即获得减速机应有的输出转矩值，以此为据，并结合速比值或输出转速值，选定所需减速机规格。
· 用户也可以根据已知的输入功率，结合速比值或输出转速值，计算输出转矩，选定减速机。
· 本公司减速机均为右旋螺牙，根据右手定则，确定输入轴、输出轴回转方向。

4.3 Reducer selected

– At first it is better to make sure the value input machinery load T (torque) and then you can get the output torque through T multiply with work situation coefficient K1 and work situation revise coefficent K2. The required model can be gained by the above and connecting ratio or output speed.
– You can also select the reducer as followings: calculate output torque according to known input power and then select the reducer in accordance with output torque and rotate speed.
– Our standard reducers all have right-hand helical tooth, deciding the rotating direction of input shaft and output shaft according to the right-hand criterion.

4.4 选型示例

例1 通用传送带（均匀负荷）

转矩：19N.m，　　运转时间：8小时/天，
转速：约55r/min，　　启动频率：10次/小时，
减速机：1/25，　　环境温度：室内25℃，　　电机直联

① 根据表1，决定负荷种类
负荷种类：无冲击均匀负荷，选A；
② 根据图1，在A线上取频率10次/小时的交点；查出运转时间8小时/天的系数K1=1；
③ 根据表2，查得系数K2=1；
④ 则转矩值为 19xK1xK2=19x1x1=19N.m，可选择最接近19N.m的减速机。

选定结果：NMRVO30-1/25

输入功率0.18kW，输出转速56转/分，输出转矩21N.m
校核：实际输出转矩=输出转矩x使用系数(fs)=21x1.0=21N.m>19N.m，满足使用要求。

4.4 Examples for model chosen

Ex1 Common convey band (uniform load)

Torque:19N.m　　Turning time: 8hours/day
Speed: About 55r/min　　Start frequency: 10times/hour
Ratio: 1/25　　Environment temperature: indoor 25℃　　Connect with motor directly

- Load classification: Uniform load, choose A, Select load classification according to table1.
- As per cross point of 10 times/hour frequency on line A in diagram 1, get coefficient K1 value is 1 that turning time is 8 hours/day.
- Get the coefficient K2 according to table 2.
- So the torque value is 19N.m

Choose mode: NMRVO30-1/25

Input power is 0.18kW, output speed is 56r/min, output torque is 21N.m

Check computation

You can get the actual output torque through the nominal output torque 21N.m multiply with the coefficient fs 1, so the actual output torque is 21N.m>19N.m. The selected model is suitable for use.

例2 输送带（中等冲击负荷）

转矩：65N.m，　　运转时间：16小时/天，
转速：约21r/min，　　启动频率：100次/小时，
减速机：1/60，　　环境温度：室内35℃，　　电机直联

① 根据表1，决定负荷种类
负荷种类：轻度冲击负荷，选B；
② 根据图1，在B线上取频率100次/小时的交点；查出运转时间16小时/天的系数K1=1.65;
③ 根据表2，查得系数K2=1.15;
④ 则转矩值为 65xK1xK2=65x1.65x1.15=123N.m，可选择最接近123N.m的减速机。

选定结果：NMRVO63-1/60

输入功率0.55kW，输出转速23.3转/分，输出转矩140N.m
校核：实际输出转矩=输出转矩x使用系数(fs)=140x0.9=126N.m>123N.m，满足使用要求。

Ex2 Convey band (moderate load)

Torque:65N.m　　Turning time: 16hours/day
Speed: About 21r/min　　Start frequency: 100times/hour
Ratio: 1/60　　Environment temperature: indoor 35℃　　Connect with motor directly

- As per load classification table 1 : moderate load, choose B.
- As per cross point of 100 times/hours frequency on line B in diagram 1, get coefficient K1 value is 1.68 that turning time is 16 hours/day.
- Get the coefficient K2 1.15 according to table 2.
- So the torque value is 65N.m. You can select the model that torque value most close to 123N.m.

Choose mode: NMRVO63-1/60

Input power is 0.55kW, output speed is 23.3r/min, output torque is 140N.m

Check computation

You can get the actual output torque through the nominal output torque 140N.m multiply with the coefficient fs 0.9, so the actual output torque is 126N.m>123N.m. The selected model is suitable for use.

5. 选型参数 Parameter Selections

5.1 单级减速机（法兰输入，输入转速1400r/min）/（配4极电机）

5.1 Single step reducer (flange input, input speed is 1400r/min)/(matched with 4 poles motor)

机型代号 Model code	输出转速 Output speed r/min	输出转矩 Output torque N.m	传动比 Transmission ratio i	输出轴径向力 Output radial force kN	使用系数 fs
	0.06kw				
025	186.7	2.6	7.5	0.5	4.2
	140	3.4	10	0.55	3.5
	93.3	4.9	15	0.63	2.5
	70	6.1	20	0.69	2.0
	46.7	8.2	30	0.79	1.6
	35	10	40	0.87	1.3
	28	12	50	0.94	0.9
	23.3	14	60	1	0.7
030	186.7	2.6	7.5	0.68	6.9
	140	3.4	10	0.75	5.4
	93.3	4.7	15	0.86	3.8
	70	6	20	0.94	3.0
	56	7	25	1.02	3.0
	46.7	8	30	1.08	2.5
	35	9.7	40	1.19	1.9
	28	11	50	1.28	1.5
	23.3	13	60	1.36	1.3
	17.5	14	80	1.5	0.9
	0.09kw				
025	186.7	3.9	7.5	0.5	2.8
	140	5.1	10	0.55	2.4
	93.3	7.3	15	0.63	1.6
	70	9.2	20	0.69	1.3
	4637	12	30	0.79	1.1
	35	15	40	0.87	0.9
030	186.7	3.9	7.5	0.68	4.6
	140	5	10	0.75	3.6
	93.3	7.1	15	0.86	2.5
	70	9	20	0.94	2.0
	56	10	25	1.02	2.0
	46.7	12	30	1.08	1.7
	35	14	40	1.19	1.2
	28	17	50	1.28	1.0
	23.3	19	60	1.36	0.9
040	28	19	50	2.47	2.0
	23.3	21	60	2.63	1.7
	17.5	26	80	2.89	1.3
	14	29	100	3.11	1.0
	0.12kw				
030	186.7	5.2	7.5	0.68	3.4

机型代号 Model code	输出转速 Output speed r/min	输出转矩 Output torque N.m	传动比 Transmission ratio i	输出轴径向力 Output radial force kN	使用系数 fs
	0.12kw				
030	140	6.7	10	0.75	2.7
	93.3	9.5	15	0.86	1.9
	70	12	20	0.94	1.5
	56	14	25	1.02	1.5
	46.7	16	30	1.08	1.3
	35	19	40	1.19	0.9
	28	23	50	1.28	0.8
040	46.7	17.2	30	2.08	2.6
	35	21	40	2.29	1.9
	28	25	50	2.47	1.5
	23.3	28	60	2.63	1.3
	17.5	34	80	2.89	1.0
	14	38	100	3.11	0.8
050	23.3	29	60	3.61	2.3
	17.5	35	80	3.97	1.9
	14	40	100	4.28	1.4
	0.18kw				
030	186.7	7.8	7.5	0.68	2.3
	140	10	10	0.75	1.8
	93.3	14	15	0.86	1.3
	70	18	20	0.94	1.0
	56	21	25	1.02	1.0
	46.7	24	30	1.08	0.8
040	70	19	20	1.82	2.0
	56	23	25	1.96	1.7
	46.7	26	30	2.08	1.7
	35	32	40	2.29	1.3
	28	38	50	2.47	1.0
	23.3	43	60	2.63	0.8
050	35	32	40	3.15	2.3
	28	39	50	3.39	1.9
	23.3	43	60	3.61	1.6
	17.5	52	80	3.97	1.2
	14	60	100	4.28	0.9
	0.25kw				
040	186.7	11	7.5	1.31	3.6
	140	14	10	1.44	2.8
	93.3	21	15	1.65	1.9
	70	27	20	1.82	1.5

机型代号 Model code	输出转速 Output speed r/min	输出转矩 Output torque N.m	传动比 Transmission ratio i	输出轴径向力 Output radial force kN	使用系数 fs
	0.25kw				
040	56	32	25	1.96	1.2
	46.7	36	30	2.08	1.3
	35	44	40	2.29	0.9
	28	37	50	2.47	0.8
050	70	26	20	2.5	2.7
	56	32	25	2.69	2.2
	46.7	37	30	2.86	2.3
	35	46	40	3.15	1.7
	28	54	50	3.39	1.4
	23.3	60	60	3.61	1.1
	17.5	72	80	3.97	0.9
063	28	56	50	4.44	2.4
	23.3	63	60	4.71	2.0
	17.5	78	80	5.19	1.6
	14	87	100	5.59	1.4
	0.37kw				
040	186.7	16	7.5	1.31	2.4
	140	21	10	1.44	1.9
	93.3	31	15	1.65	1.3
	70	39	20	1.82	1.0
	56	47	25	1.96	0.8
	46.7	53	30	2.08	0.8
050	140	21	10	1.98	3.3
	93.3	31	15	2.27	2.4
	70	40	20	2.5	1.8
	56	48	25	2.69	1.5
	46.7	55	30	2.86	1.5
	35	68	40	3.15	1.1
	28	80	50	3.39	0.9
	23.3	89	60	3.61	0.8
063	35	70	40	4.12	2.1
	28	83	50	4.44	1.6
	23.3	94	60	4.71	1.4
	17.5	115	80	5.19	1.1
	14	129	100	5.59	0.9
	0.55kw				
050	186.7	25	7.5	1.8	2.9
	140	32	10	1.98	2.2
	93.3	46	15	2.27	1.6
	70	59	20	2.5	1.2
	56	71	25	2.69	1.0
	46.7	81	30	2.86	1.0
	35	80	40	3.15	0.9

机型代号 Model code	输出转速 Output speed r/min	输出转矩 Output torque N.m	传动比 Transmission ratio i	输出轴径向力 Output radial force kN	使用系数 fs
	0.55kw				
063	70	60	20	3.27	2.2
	56	73	25	3.52	1.8
	46.7	83	30	3.74	1.9
	35	105	40	4.12	1.4
	28	124	50	4.44	1.1
	23.3	140	60	4.71	0.9
075	35	108	40	4.86	2.0
	28	129	50	5.24	1.6
	23.3	146	60	5.56	1.4
	17.5	180	80	6.13	1.1
	14	206	100	6.6	0.9
090	17.5	189	80	6.78	1.5
	14	221	100	7.3	1.2
	0.75kw				
050	186.7	34	7.5	1.8	2.1
	140	44	10	1.98	1.6
	93.3	63	15	2.27	1.2
	70	81	20	2.5	0.9
063	93.3	63	15	2.97	2.2
	70	83	20	3.27	1.6
	56	100	25	3.52	1.3
	46.7	114	30	3.74	1.4
	35	143	40	4.12	1.0
075	56	102	25	4.16	2.0
	46.7	117	30	4.42	2.0
	35	147	40	4.86	1.5
	28	177	50	5.24	1.2
	23.3	200	60	5.56	1.0
090	28	184	50	5.79	1.8
	23.3	212	60	6.16	1.5
	17.5	258	80	6.78	1.1
	14	302	100	7.3	0.9
	1.1kw				
063	186.7	49	7.5	2.35	2.6
	140	65	10	2.59	2.0
	93.3	93	15	2.97	1.5

机型代号 Model code	输出转速 Output speed r/min	输出转矩 Output torque N.m	传动比 Transmission ratio i	输出轴径向力 Output radial force kN	使用系数 fs
	1.1kw				
063	70	122	20	3.27	1.1
	56	146	25	3.52	0.9
	46.7	167	30	3.74	1.0
	35	165	40	3.59	0.9
075	93.3	95	15	3.5	2.1
	70	123	20	3.86	1.7
	56	150	25	4.16	1.3
	46.7	171	30	4.42	1.3
	35	216	40	4.86	1.0
	28	264	50	4.6	0.9
	23.3	223	60	4.89	0.8
090	35	225	40	5.38	1.6
	28	270	50	5.79	1.3
	23.3	311	60	6.16	1.0
	17.5	328	80	6.17	0.9
110	28	281	50	7.32	2.3
	23.3	324	60	7.78	1.9
	17.5	402	80	8.57	1.3
	14	473	100	9.23	1.0
	1.5kw				
063	186.7	67	7.5	2.35	1.9
	140	89	10	2.59	1.5
	93.3	127	15	2.97	1.3
	70	166	20	3.27	1.0
075	140	90	10	3.06	2.2
	93.3	130	15	3.5	1.5
	70	168	20	3.86	1.3
	56	205	25	4.16	1.0
	46.7	233	30	4.42	1.0
090	70	171	20	4.27	2.1
	56	210	25	4.6	1.6
	46.7	239	30	4.89	1.7
	35	307	40	5.38	1.2
	28	368	50	5.79	0.9
	23.3	424	60	6.16	0.8
110	35	319	40	6.8	2.2
	28	384	50	7.32	1.7
	23.3	442	60	7.78	1.4
	17.5	548	80	8.57	0.9
	2.2kw				
075	186.7	100	7.5	2.78	1.8
	140	132	10	3.06	1.5
	93.3	191	15	3.5	1.0
	70	240	20	3.38	0.9
	46.7	269	30	3.89	0.8
090	186.7	101	7.5	3.08	2.9

机型代号 Model code	输出转速 Output speed r/min	输出转矩 Output torque N.m	传动比 Transmission ratio i	输出轴径向力 Output radial force kN	使用系数 fs
	2.2kw				
090	140	134	10	3.39	2.3
	93.3	194	15	3.88	1.9
	70	252	20	4.27	1.4
	56	308	25	4.6	1.1
	46.7	351	30	4.89	1.2
	35	433	40	4.9	1.0
	28	393	50	5.28	0.9
110	70	255	20	5.39	2.5
	56	315	25	5.81	2.2
	46.7	356	30	6.18	2.0
	35	468	40	6.8	1.5
	28	563	50	7.32	1.2
	23.3	648	60	7.78	1.0
130	35	468	40	8.89	2.2
	28	563	50	9.58	1.7
	23.3	648	60	10.18	1.4
	17.5	816	80	11.21	1.0
	14	869	100	10.62	0.8
150	28	570	50	13.1	2.5
	23.3	657	60	13.92	1.9
	17.5	816	80	15.32	1.4
	14	960	100	16.5	1.0
	3kw				
075	186.7	136	7.5	2.78	1.4
	140	180	10	3.06	1.1
	93.3	261	15	3.5	0.8
090	186.7	138	7.5	3.08	2.1
	140	182	10	3.39	1.7
	93.3	264	15	3.88	1.4
	70	344	20	4.27	1.0
	56	420	25	4.6	0.8
	46.7	479	30	4.89	0.9
110	93.3	264	15	4.9	2.5
	70	348	20	5.39	1.9
	56	430	25	5.81	1.6
	46.7	485	30	6.18	1.5
	35	638	40	6.8	1.1
	28	767	50	7.32	0.9
130	56	429	25	7.6	2.2
	46.7	491	30	8.08	2.1
	35	638	40	8.89	1.6
	28	767	50	9.58	1.3
	23.3	884	60	10.18	1.0
	17.5	1113	80	11.21	0.8

机型代号 Model code	输出转速 Output speed r/min	输出转矩 Output torque N.m	传动比 Transmission ratio i	输出轴径向力 Output radial force kN	使用系数 fs
	3kw				
150	28	777	50	13.1	1.8
	23.3	896	60	13.92	1.4
	17.5	1113	80	15.32	1.0
	14	1310	100	16.5	0.8
	4kw				
075	186.7	182	7.5	2.44	1.0
	140	240	10	3.06	0.8
090	186.7	184	7.5	3.08	1.6
	140	243	10	3.39	1.3
	93.3	352	15	3.88	1.0
	70	458	20	4.27	0.8
110	140	242	10	4.28	2.5
	93.3	352	15	4.9	1.9
	70	464	20	5.39	1.4
	56	573	25	5.81	1.2
	46.7	647	30	6.18	1.1
130	56	573	25	7.6	1.6
	46.7	655	30	8.08	1.6
	35	851	40	8.89	1.2
	28	1023	50	9.58	1.0
	23.3	1179	60	10.18	0.8
150	28	1036	50	13.1	1.4
	23.3	1195	60	13.92	1.1
	17.5	1484	80	15.32	0.8
	5.5kw				
110	186.7	253	7.5	3.89	2.2
	140	334	10	4.28	1.8
	93.3	484	15	4.9	1.4
	70	638	20	5.39	1.0
	56	711	25	5.15	0.9
130	140	333	10	5.6	2.5
	93.3	490	15	6.41	1.9
	70	645	20	7.06	1.4
	56	788	25	7.6	1.2
	46.7	900	30	8.08	1.2
	35	1171	40	8.89	0.9
	28	1103	50	8.51	0.8
150	70	645	20	9.65	2.0
	56	788	25	10.4	1.5
	46.7	934	30	11.05	1.3
	35	1171	40	12.16	1.3
	28	1426	50	13.1	1.0
	23.3	1643	60	13.92	0.8

机型代号 Model code	输出转速 Output speed r/min	输出转矩 Output torque N.m	传动比 Transmission ratio i	输出轴径向力 Output radial force kN	使用系数 fs
	7.5kw				
110	186.7	345	7.5	3.89	1.6
	140	455	10	4.28	1.3
	93.3	660	15	4.9	1.0
130	186.7	349	7.5	5.09	2.1
	140	455	10	5.6	1.8
	93.3	668	15	6.41	1.4
	70	880	20	7.06	1.0
	56	1074	25	7.6	0.9
	46.7	1228	30	8.08	0.8
	35	1596	40	8.89	0.7
150	70	880	20	9.65	1.5
	56	1074	25	10.4	1.1
	46.7	1274	30	11.05	0.9
	35	1596	40	12.16	1.0
	11kw				
150	186.7	512	7.5	6.96	2.3
	140	675	10	7.66	1.8
	93.3	990	15	8.77	1.3
	70	1291	20	9.65	1.0
	56	1576	25	10.4	0.8
	15kw				
150	186.7	698	7.5	6.96	1.7
	140	921	10	7.66	1.3
	93.3	1351	15	8.77	0.9
	70	1760	20	9.65	0.7

5.2 双级减速机（法兰输入、输入转速1400r/min）/（配4极电机）

5.2 Double step reducer(flanger input, input speed is 1400r/min)/(with 4 poles motor)

组合机型规格 Combination Model code	输出转速 Output speed r/min	输出转矩 Output torque N.m	总传动比 General Transmission ratio i	高速级传动比 High speed transmission ratio i	低速级传动比 Low speed transmission ratio i	输出轴径向力 Output radial force kN	使用系数 fs
	0.06kw						
25/30	14	25	100	10	10	1.62	1.3
	9.3	32	150	10	15	1.83	0.9
	7.0	41	200	10	20	1.83	0.7
	5.6	44	250	10	25	1.83	0.8
25/40	4.7	59	300	10	30	3.49	1.2
	3.5	71	400	10	40	3.49	0.9
	2.8	82	500	20	25	3.49	0.7
	2.3	101	600	20	30	3.49	0.6
	1.9	116	750	25	30	3.49	0.5
	1.6	143	900	30	30	3.49	0.5
	1.2	171	1200	30	40	3.49	0.4
	0.9	197	1500	50	30	3.49	0.3
	0.78	217	1800	60	30	3.49	0.3
	0.6	268	2400	60	40	3.49	0.2
	0.5	324	3000	60	50	3.49	0.2
	0.4	294	4000	50	80	3.49	0.1
	0.3	356	5000	50	100	3.49	0.1
30/40	4.7	57	300	10	30	3.49	1.3
	3.5	70	400	10	40	3.49	0.9
	2.8	96	500	20	25	3.49	0.6
	2.3	104	600	20	30	3.49	0.7
	1.9	121	750	25	30	3.49	0.6
	1.6	139	900	30	30	3.49	0.5
	1.2	166	1200	30	40	3.49	0.4
	0.9	196	1500	50	30	3.49	0.4
	0.78	218	1800	60	30	3.49	0.3
	0.58	261	2400	60	40	3.49	0.2
	1.4	300	3200	80	40	3.49	0.2
	0.4	279	4000	50	80	3.49	0.1
	0.28	338	5000	50	100	3.49	0.1
30/50	1.6	141	900	30	30	4.84	1.0
	1.2	169	1200	30	40	4.84	0.7
	0.93	199	1500	50	30	4.84	0.7
	0.78	222	1800	60	30	4.84	0.7
	0.6	266	2400	60	40	4.84	0.5
	0.5	307	3000	60	50	4.84	0.4
	0.35	288	4000	50	80	4.84	0.3
	0.29	311	4800	60	80	4.84	0.3
30/63	0.9	203	1500	30	50	6.27	1.1
	0.78	225	1800	30	60	6.27	0.9
	0.58	276	2400	60	40	6.27	0.8

组合机型规格 Combination Model code	输出转速 Output speed r/min	输出转矩 Output torque N.m	总传动比 General Transmission ratio i	高速级传动比 High speed transmission ratio i	低速级传动比 Low speed transmission ratio i	输出轴径向力 Output radial force kN	使用系数 fs
	0.06kw						
30/63	0.47	319	3000	60	50	6.27	0.7
	0.35	306	4000	50	80	6.27	0.6
	0.28	360	5000	50	100	6.27	0.4
40/75	0.6	330	2400	60	40	7.38	1.1
	0.47	377	3000	60	50	7.38	0.8
	0.35	355	4000	50	80	7.38	0.7
	0.28	419	5000	50	100	7.38	0.5
40/90	0.5	405	3000	60	50	8.18	1.4
	0.35	365	4000	50	80	8.18	1.3
	0.28	431	5000	50	100	8.18	1.0
	0.09kw						
25/30	14	37	100	10	10	1.62	0.8
	9.3	49	150	10	15	1.83	0.6
	7.0	62	200	10	20	1.83	0.5
	5.6	66	250	10	25	1.83	0.5
	4.7	75	300	10	30	1.83	0.4
	3.5	107	400	10	40	1.83	0.3
	2.8	115	500	20	25	1.83	0.2
	2.3	135	600	20	30	1.83	0.2
	1.9	151	750	25	30	1.83	0.2
	1.6	178	900	30	30	1.83	0.2
	1.2	212	1200	30	40	1.83	0.1
	0.9	247	1500	50	30	1.83	0.1
	0.78	304	1800	60	30	1.83	0.1
	0.58	340	2400	60	40	1.83	0.1
	0.47	405	3000	60	50	1.83	0.1
30/40	4.7	88	300	10	30	3.49	0.8
30/50	3.5	107	400	10	40	4.84	1.2
	2.8	123	500	10	50	4.84	1.0
	2.3	159	600	20	30	4.84	0.9
	1.9	185	750	25	30	4.84	0.8
	1.6	212	900	30	30	4.84	0.7
30/63	1.6	200	900	15	60	6.27	1.0
	1.2	263	1200	30	40	6.27	0.9
	0.93	305	1500	30	50	6.27	0.7
40/75	0.9	359	1500	50	30	7.38	1.1
	0.78	404	1800	60	30	7.38	1
	0.58	496	2400	60	40	7.38	0.7
40/90	0.5	608	3000	60	50	8.18	0.9
	0.35	548	4000	50	80	8.18	0.8

组合机型规格 Combination Model code	输出转速 Output speed r/min	输出转矩 Output torque N.m	总传动比 General Transmission ratio i	高速级传动比 High speed transmission ratio i	低速级传动比 Low speed transmission ratio i	输出轴径向力 Output radial force kN	使用系数 fs
	0.12kw						
30/50	4.7	118	300	10	30	4.84	1.2
	3.5	142	400	10	40	4.84	0.9
	2.8	164	500	10	50	4.84	0.7
30/63	2.8	171	500	10	50	6.27	1.3
	2.3	208	600	15	40	6.27	1.1
	1.9	241	750	15	50	6.27	0.9
40/75	1.6	324	900	30	30	7.38	1.2
	1.2	399	1200	30	40	7.38	0.9
40/90	0.78	546	1800	30	60	8.18	0.9
	0.58	695	2400	60	40	8.18	0.9
50/110	0.5	883	3000	60	50	10.32	1.2
	0.35	784	4000	50	80	10.32	1.0
	0.28	928	5000	50	100	10.32	0.8
	0.18kw						
30/63	3.5	221	400	10	40	6.27	1.0
	2.8	257	500	10	50	6.27	0.8
40/75	2.3	362	600	20	30	7.38	1.1
	1.9	435	750	25	30	7.38	0.9
	1.6	487	900	30	30	7.38	0.8
40/90	1.2	639	1200	30	40	8.18	1.0
	0.93	735	1500	30	50	8.18	0.8
50/110	0.78	860	1800	60	30	10.32	1.5
	0.58	1113	2400	60	40	10.32	1.1
	0.25kw						
30/63	3.5	159	400	10	40	6.27	1.4
	2.8	185	500	10	50	6.27	1.2
40/75	3.5	336	400	10	40	7.38	1.1
	2.8	384	500	10	50	7.38	0.8
40/90	2.3	511	600	15	40	8.18	1.2
	1.9	598	750	15	50	8.18	0.9
	1.6	667	900	15	60	8.18	0.8
50/110	1.2	943	1200	30	40	10.32	1.3
	0.93	1064	1500	50	30	10.32	1.2
	0.78	1195	1800	60	30	10.32	1.1
63/130	0.6	1624	2400	60	40	13.5	1.0
	0.47	1935	3000	60	50	13.5	0.8

组合机型规格 Combination Model code	输出转速 Output speed r/min	输出转矩 Output torque N.m	总传动比 General Transmission ratio i	高速级传动比 High speed transmission ratio i	低速级传动比 Low speed transmission ratio i	输出轴径向力 Output radial force kN	使用系数 fs
	0.25kw						
63/130	0.35	2046	4000	50	80	13.5	0.6
	0.28	2430	5000	50	100	13.5	0.5
63/150	0.78	1199	1800	60	30	18	1.8
	0.6	1446	2400	60	40	18	1.8
	0.5	1713	3000	60	50	18	1.4
	0.4	2026	4000	50	80	18	0.9
	0.3	2251	5000	50	100	18	0.7
	0.37kw						
40/75	4.7	405	300	10	30	7.38	1.0
	3.5	498	400	10	40	7.38	0.7
40/90	4.7	401	300	7.5	40	8.18	1.5
	3.5	523	400	10	40	8.18	1.2
	2.8	611	500	10	50	8.18	0.9
	2.3	757	600	15	40	8.18	0.8
50/110	1.9	949	750	25	30	10.32	1.3
	1.6	1079	900	30	30	10.32	1.2
	1.2	1396	1200	30	40	10.32	0.8
63/130	0.9	1674	1500	50	30	13.5	1.1
	0.78	1887	1800	60	30	13.5	0.9
63/150	0.78	1774	1800	60	30	18	1.2
	0.6	2141	2400	60	40	18	1.2
	0.5	2535	3000	60	50	18	0.9
	0.55kw						
50/110	4.7	638	300	10	30	10.32	2.0
	3.5	826	400	10	40	10.32	1.4
	2.8	984	500	10	50	10.32	1.1
	2.3	1181	600	15	40	10.32	1.0
	1.9	1411	750	25	30	10.32	0.9
63/130	2.8	995	500	10	50	13.5	1.6
	1.9	1471	750	25	30	13.5	1.2
	1.2	2132	1200	30	40	13.5	0.8
63/150	0.78	2637	1800	60	30	18	0.8
	0.6	3182	2400	60	40	18	0.8

YDHN 一鼎华耐 轻松传动每一秒 www.yd-reducer.com
专业蜗轮蜗杆减速机制造商 Specialized manufacturer of worm gear reducer

组合机型规格 Combination Model code	输出转速 Output speed r/min	输出转矩 Output torque N.m	总传动比 General Transmission ratio i	高速级传动比 High speed transmission ratio i	低速级传动比 Low speed transmission ratio i	输出轴径向力 Output radial force kN	使用系数 fs
	0.75kw						
50/110	4.7	871	300	10	30	10.32	1.5
	3.5	1126	400	10	40	10.32	1.1
63/130	2.8	1357	500	10	50	13.5	1.1
	2.3	1631	600	15	40	13.5	1.0
	1.9	2005	750	25	30	13.5	0.9
	1.6	2283	900	30	30	13.5	0.8
63/150	2.8	1290	500	10	50	18	1.8
	2.3	1529	600	15	40	18	1.7
	1.9	1783	750	25	30	18	1.3
	1.6	2215	900	30	30	18	0.9
	1.2	2680	1200	30	40	18	1.0
	1.1kw						
63/130	4.7	1312	300	10	30	13.5	1.3
	3.5	1671	400	10	40	13.5	1.0
	2.8	1991	500	10	50	13.5	0.8
63/150	9.3	752	150	10	15	18	3.1
	7.0	966	200	10	20	18	2.4
	5.6	1175	250	10	25	18	1.7
	4.7	1364	300	10	30	18	1.7
	3.5	1619	400	10	40	18	1.6
	2.8	1893	500	10	50	18	1.2
	2.3	2242	600	15	40	18	1.2
	1.9	2616	750	25	30	18	0.9
	1.5kw						
63/130	4.7	1789	300	10	30	13.5	1.0
	3.5	2279	400	10	40	13.5	0.7
63/150	9.3	1026	150	10	15	18	2.3
	7.0	1317	200	10	20	18	1.8
	5.6	1602	250	10	25	18	1.3
	4.7	1860	300	10	30	18	1.3
	3.5	2208	400	10	40	18	1.2
	2.8	2582	500	10	50	18	0.9
	2.3	3057	600	15	40	18	0.9

5.3 单级减速机（轴伸输入、输入转速1400r/min）

5.3 Single step reducer(shaft extend input, input speed is 1400r/min)

机型代号 Model code	输入轴功率 Input power kW	输出转速 Output speed r/min	输出转矩 Output torque N.m	传动比 Transmission ratio i	输出轴径向力 Output radial force kN	输入轴径向力 Input radial force kN
30	0.4	186.7	18	7.5	0.68	0.15
	0.3	140	18	10	0.75	0.16
	0.2	93.3	18	15	0.86	0.16
	0.2	70	18	20	0.94	0.19
	0.2	56	21	25	1.02	0.21
	0.2	46.7	20	30	1.08	0.21
	0.1	35	18	40	1.19	0.21
	0.1	28	17	50	1.28	0.21
	0.1	23.3	16	60	1.36	0.21
	0.1	17.5	13	80	1.5	0.21
40	0.9	186.7	40	7.5	1.31	0.29
	0.7	140	40	10	1.44	0.33
	0.5	93.3	40	15	1.65	0.33
	0.4	70	39	20	1.82	0.35
	0.3	56	38	25	1.96	0.35
	0.3	46.7	45	30	2.08	0.35
	0.2	35	41	40	2.29	0.35
	0.2	28	39	50	2.47	0.35
	0.2	23.3	36	60	2.63	0.35
	0.1	17.5	33	80	2.89	0.35
	0.1	14	29	100	3.11	0.35
50	1.6	186.7	71	7.5	1.8	0.4
	1.2	140	72	10	1.98	0.49
	0.9	93.3	74	15	2.27	0.49
	0.7	70	73	20	2.5	0.49
	0.5	56	70	25	2.69	0.49
	0.6	46.7	84	30	2.86	0.49
	0.4	35	76	40	3.15	0.49
	0.3	28	73	50	3.39	0.49
	0.3	23.3	68	60	3.61	0.49
	0.2	17.5	65	80	3.97	0.49
	0.2	14	55	100	4.28	0.49
63	2.8	186.7	128	7.5	2.35	0.5
	2.2	140	130	10	2.59	0.57
	1.6	93.3	140	15	2.97	0.61
	1.2	70	135	20	3.27	0.66
	1.0	56	130	25	3.52	0.70
	1.1	46.7	160	30	3.74	0.70
	0.8	35	145	40	4.12	0.70
	0.6	28	135	50	4.44	0.70
	0.5	23.3	130	60	4.71	0.70

机型代号 Model code	输入轴功率 Input power kW	输出转速 Output speed r/min	输出转矩 Output torque N.m	传动比 Transmission ratio i	输出轴径向力 Output radial force kN	输入轴径向力 Input radial force kN
63	0.4	17.5	122	80	5.19	0.70
	0.3	14	118	100	5.59	0.70
75	4.1	186.7	185	7.5	2.78	0.70
	3.2	140	195	10	3.06	0.83
	2.3	93.3	200	15	3.50	0.85
	1.9	70	210	20	3.86	0.98
	1.5	56	200	25	4.16	0.98
	1.5	46.7	230	30	4.42	0.98
	1.1	35	220	40	4.86	0.98
	0.9	28	210	50	5.24	0.98
	0.8	23.3	200	60	5.56	0.98
	0.6	17.5	190	80	6.13	0.98
	0.5	14	180	100	6.60	0.98
90	6.3	186.7	290	7.5	3.08	0.90
	5.1	140	310	10	3.39	1.08
	4.1	93.3	360	15	3.88	1.25
	3.1	70	355	20	4.27	1.27
	2.4	56	340	25	4.60	1.27
	2.6	46.7	410	30	4.89	1.27
	1.8	35	360	40	5.38	1.27
	1.4	28	340	50	5.79	1.27
	1.1	23.3	320	60	6.16	1.27
	0.8	17.5	285	80	6.78	1.27
	0.7	14	270	100	7.30	1.27
110	12	186.7	552	7.5	3.89	1.20
	9.8	140	598	10	4.28	1.46
	7.5	93.3	656	15	4.90	1.60
	5.6	70	644	20	5.39	1.70
	4.7	56	679	25	5.81	1.70
	4.5	46.7	725	30	6.18	1.70
	3.3	35	702	40	6.80	1.70
	2.6	28	660	50	7.32	1.70
	2.1	23.3	616	60	7.78	1.70
	1.4	17.5	515	80	8.57	1.70
	1.1	14	483	100	9.23	1.70
130	16.1	186.7	750	7.5	5.09	1.50
	13.5	140	820	10	5.60	1.84
	10.3	93.3	920	15	6.41	2.07
	7.8	70	910	20	7.06	2.10
	6.5	56	930	25	7.60	2.10

机型代号 Model code	输入轴功率 Input power kW	输出转速 Output speed r/min	输出转矩 Output torque N.m	传动比 Transmission ratio i	输出轴径向力 Output radial force kN	输入轴径向力 Input radial force kN
130	6.4	46.7	1040	30	8.08	2.10
	4.9	35	1050	40	8.89	2.10
	3.8	28	980	50	9.58	2.10
	3.1	23.3	900	60	10.18	2.10
	2.3	17.5	840	80	11.21	2.10
	1.7	14	740	100	12.07	2.10
150	25.8	186.7	1200	7.5	6.96	1.95
	20.2	140	1240	10	7.66	2.26
	13.9	93.3	1250	15	8.77	2.28
	11.1	70	1300	20	9.65	2.67
	8.4	56	1200	25	10.40	2.80
	7.1	46.7	1200	30	11.05	2.80
	7.3	35	1550	40	12.16	2.80
	5.4	28	1400	50	13.10	2.80
	4.2	23.3	1260	60	13.92	2.80
	3.1	17.5	1150	80	15.32	2.80
	2.3	14	1000	100	16.50	2.80

5.4 双级减速机（轴伸输入、输入转速1400r/min）

5.3 Double step reducer(shaft extend input, input speed is 1400r/min)

机型代号 Model code	输入轴功率 Input power kW	输出转速 Output speed r/min	输出转矩 Output torque N.m	传动比 Transmission ratio i	输出轴径向力 Output radial force kN	输入轴径向力 Input radial force kN
30/40	0.1	4.7	73	300	3.49	0.21
	0.1	3.5	65	400	3.49	0.21
	0.08	2.8	61	500	3.49	0.21
	0.06	2.3	73	600	3.49	0.21
	0.04	1.9	73	750	3.49	0.21
	0.03	0.6	73	900	3.49	0.21
	0.02	1.2	65	1200	3.49	0.21
	0.02	0.9	73	1500	3.49	0.21
	0.02	0.78	73	1800	3.49	0.21
	0.01	0.58	65	2400	3.49	0.21
	0.01	0.4	65	3200	3.49	0.21
	0.01	0.35	33	4000	3.49	0.21
	0.01	0.28	29	5000	3.49	0.21
30/50	0.15	4.7	145	300	4.84	0.21
	0.1	3.5	124	400	4.84	0.21
	0.1	2.8	120	500	4.84	0.21
	0.1	2.3	145	600	4.84	0.21
	0.1	1.9	145	750	4.84	0.21
	0.1	1.6	145	900	4.84	0.21
	0.08	1.2	124	1200	4.84	0.21
	0.06	0.93	145	1500	4.84	0.21
	0.04	0.78	145	1800	4.84	0.21
	0.03	0.6	124	2400	4.84	0.21
	0.02	0.5	120	3000	4.84	0.21
	0.02	0.35	82	4000	4.84	0.21
	0.02	0.29	82	4800	4.84	0.21
30/63	0.24	4.7	230	300	6.27	0.21
	0.2	3.5	230	400	6.27	0.21
	0.2	2.8	216	500	6.27	0.21
	0.13	2.3	230	600	6.27	0.21
	0.11	1.9	216	750	6.27	0.21
	0.1	1.6	198	900	6.27	0.21
	0.1	1.2	230	1200	6.27	0.21
	0.1	0.93	216	1500	6.27	0.21
	0.1	0.78	198	1800	6.27	0.21
	0.1	0.58	230	2400	6.27	0.21
	0.08	0.47	216	3000	6.27	0.21
	0.06	0.35	172	4000	6.27	0.21
	0.04	0.28	150	500	6.27	0.21
40/75	0.4	4.7	390	300	7.38	0.35
	0.3	3.5	360	400	7.38	0.35
	0.21	2.8	320	500	7.38	0.35

机型代号 Model code	输入轴功率 Input power kW	输出转速 Output speed r/min	输出转矩 Output torque N.m	传动比 Transmission ratio i	输出轴径向力 Output radial force kN	输入轴径向力 Input radial force kN
40/75	0.2	2.3	390	600	7.38	0.35
	0.2	1.9	390	750	7.38	0.35
	0.14	1.6	390	900	7.38	0.35
	0.11	1.2	360	1200	7.38	0.35
	0.1	0.93	390	1500	7.38	0.35
	0.1	0.78	390	1800	7.38	0.35
	0.1	0.58	360	2400	7.38	0.35
	0.1	0.47	320	3000	7.38	0.35
	0.08	0.35	250	4000	7.38	0.35
	0.06	0.28	230	5000	7.38	0.35
40/90	0.6	4.7	610	300	8.18	0.35
	0.43	3.5	610	400	8.18	0.35
	0.34	2.8	560	500	8.18	0.35
	0.3	2.3	610	600	8.18	0.35
	0.23	1.9	560	750	8.18	0.35
	0.2	1.6	505	900	8.18	0.35
	0.2	1.2	610	1200	8.18	0.35
	0.14	0.93	560	1500	8.18	0.35
	0.11	0.78	505	1800	8.18	0.35
	0.11	0.58	610	2400	8.18	0.35
	0.1	0.47	560	3000	8.18	0.35
	0.1	0.35	460	4000	8.18	0.35
	0.1	0.28	410	5000	8.18	0.35
50/110	1.1	4.7	1265	300	10.32	0.49
	0.8	3.5	1185	400	10.32	0.49
	0.61	2.8	1100	500	10.32	0.49
	0.6	2.3	1185	600	10.32	0.49
	05	1.9	1265	750	10.32	0.49
	0.43	1.6	1265	900	10.32	0.49
	0.31	1.2	1186	1200	10.32	0.49
	0.3	0.93	1265	1500	10.32	0.49
	0.3	0.78	1265	1800	10.32	0.49
	0.2	0.58	1185	2400	10.32	0.49
	0.15	0.47	1100	3000	10.32	0.49
	0.13	0.35	819	4000	10.32	0.49
	0.1	0.28	746	5000	10.32	0.49
63/130	1.5	4.7	1760	300	13.5	0.7
	1.1	3.5	1650	400	13.5	0.7
	0.9	2.8	1550	500	13.5	0.7
	0.8	2.3	1650	600	13.5	0.7
	0.7	1.9	1760	750	13.5	0.7

YDHN 一鼎华耐 轻松传动每一秒 www.yd-reducer.com
专业蜗轮蜗杆减速机制造商 Specialized manufacturer of worm gear reducer

机型代号 Model code	输入轴功率 Input power kW	输出转速 Output speed r/min	输出转矩 Output torque N.m	传动比 Transmission ratio i	输出轴径向力 Output radial force kN	输入轴径向力 Input radial force kN
63/130	0.6	1.6	1760	900	13.5	0.7
	0.4	1.2	1650	1200	13.5	0.7
	0.4	0.93	1760	1500	13.5	0.7
	0.3	0.78	1760	1800	13.5	0.7
	0.3	0.58	1650	2400	13.5	0.7
	0.2	0.47	1550	3000	13.5	0.7
	0.1	0.35	1220	4000	13.5	0.7
	0.1	0.28	1100	5000	13.5	0.7
63/150	3.4	9.3	2340	150	18	0.7
	2.7	7.0	2340	200	18	0.7
	1.9	4.6	2050	250	18	0.7
	1.9	4.7	2340	300	18	0.7
	1.8	3.5	2670	400	18	0.7
	1.4	2.8	2330	500	18	0.7
	1.3	2.3	2670	600	18	0.7
	1.0	1.9	2330	750	18	0.7
	0.7	1.6	2100	900	18	0.7
	0.7	1.2	2670	1200	18	0.7
	0.4	0.78	2100	1800	18	0.7
	0.5	0.6	2670	2400	18	0.7
	0.3	0.5	2330	3000	18	0.7
	0.2	0.4	1880	4000	18	0.7
	0.2	0.3	1650	5000	18	0.7

6. 使用说明 Operating Instructions

6.1 单级蜗杆减速机

6.1.1 减速机型号25~90采用优质铝合金压铸箱体，外形轻巧美观，结构紧凑，体积小，重量轻，节省安装空间，不易锈蚀。

6.1.2 减速机型号110~150采用灰铸铁铝模铸造，外形美观坚固，可多方位安装使用。

6.1.3 散热性能好，安全可靠，效率高。

6.1.4 承载能力高，传动平稳，振动小，噪音低。

6.1.5 具有动力输入及转矩输出的多种联接结构，满足多种联接需要；箱体外形设计及底脚孔设置布局适应多种安装方式，通用性强。

6.1 Single Step Worm Gear Reducer

6.1.1 The reducer which model is 25~90 made of Aluminum alloy die-casting box, good looking in appearance, compact in structure, rust proofing on surface and small volume to save mounting space.

6.1.2 The reducer model of 110~150 is made of cast iron which casted with Aluminum mould. It's good looking and solid ,and can be used through the setting of multi-azimuth.

6.1.3Good radiating characteristic leads safe and reliability and high efficiency for using.

6.1.4 The strong capacity of loading ensure stable transmission, make less vibration and noise.

6.1.5 Varies of connecting structure for power input and torque output meet different require-merits;the design of box outline and the set of foot hole with good versality is apt to many kinds of mounting.

6.2 双级蜗杆减速机

6.2.1 由单级蜗杆减速机组合而成，具有单级蜗杆减速机的一切优点，和获得大的传动比。

6.2.2 常用双级组合机型为： 25/30、25/40、30/40、30/50、30/63、40/75、40/90、50/110、63/130、63/150，用户若有特殊要求时，可根据实际需要选择25、30、40、63、75、90、110、130、150作为组合单元另行组合。

6.2 Double Step Worm Gear Reducer

6.2.1 It is combined by two single step reducers and has all the virtues of them. And you can get bigger ratio with it.

6.2.2 The models of 25/30, 25/40, 30/40, 30/50, 30/63, 40/75, 40/90, 50/110, 63/130, 63/150are in common use. You can choose 25, 30, 40, 50, 63, 75, 90,110, 130, 150ascombinationunits to combine according to the fact of your special needs.

6.3 安装注意事项

6.3.1 减速机须安装在平整坚固的底座上，底脚螺栓必须紧固、防震。

6.3.2 原动机—减速机—工作机的各联接轴伸，安装后必须互相准确对准轴线。

6.3.3 减速机输入端及输出端轴伸外径尺寸公差按h6制作，与之相匹配的联轴器、皮带轮、链轮等传动件内孔需按合适的公差尺寸配置，避免装配过紧损坏轴承，装配过松影响正常的动力传递。

6.3.4 链轮、齿轮等传动件装上轴伸时，应尽量靠近轴承，以减少轴伸弯曲应力。

6.3.5 减速机装配电机时，应在蜗杆头部内孔孔壁及键槽处涂抹黄油，避免装配过紧，防止轴孔日久生锈。

6.3.6 使用各类电机直联型减速机时，若电机重量偏大，应设支撑装置。

6.3 Notes of Installation

6.3.1 The base-plate must be plane and stoutness, and the base-bolts must be screwed down and shockproof.

6.3.2 The connecting shafts of prime mover, reducer and operation device must be coaxial after installation.

6.3.3 The diameter tolerance zone of input and output shaft is h6,the holes of fittings (such as couplings, belt-pulley,sprocket wheel and so on) must properly mate the shaft ,which prevents bearing from breakage because of over-tight mate or avoid effecting normal power transmission because of over-loose mate.

6.3.4 Drives such as sprocket wheel and gear must be fitted close to bearing in order to reduce bending stress of hanging shaft.

6.3.5 While assembling motor to the reducer, it is necessary to add butters to the worm shaft input hole and key way, so as to avoid tightly assembling and rusting when it is used for a long time.

6.3.6 Supporting unit is required when reducers directly match with motors whose weight is bigger than normal.

6.4 使用注意事项

6.4.1使用前应注意检查减速机型式结构、中心距规格、传动比、输入轴联接方式、输出轴结构、输入轴输出轴轴指向和回转方向等是否符合使用要求，蜗杆输入转速最高不宜超过2000r/min，一般使用范围为600~1800r/min。

6.4.2开机时应逐步施加载荷，不能满载起动。

6.4.3型号25~90减速机仅设加油孔，出厂时减速机内已加好ISO VG320合成润滑油，用户无需加油，机器连续运转约10000小时后，应该更换新润滑油。

6.4.4型号110~150减速机设有加油孔、放油孔和油标，减速机内已加ISO VG460矿物润滑油，用户在使用前须拉掉通气器上的橡胶环。首次运行500小时后更换新油，以后每隔约5000小时换油一次。

6.4.5减速机允许最高油温为95℃，超过时应停机检查。

6.4.6若减速机使用环境温度超过或低于表中规定使用环境温度5℃以上，请与我公司人员联系。

6.4 Operating Notes

6.4.1 Before using, please check carefully whether the reducer mode, centre distance size, ratio, input connecting method, output shaft structure, input and output shaft direction and revolving direction are

Right revolving direction are right according to requirement. It is better that the input speed of worm shaft shouldn't exceed 2000 RPM, the general range is 600-1800 RPM.

6.4.2 The load should be added step by step when using the machine. Never running it with full load.

6.4.3The reducer which model is among 25-90 has the oil add hole only. It has been full of synthetic lubrication oil ISO VG320 .User doesn't need to think about oil adding, after about 10000 hours conti-nual running, please change new lubrication oil.

6.4.4 The reducer model of 110~150 has oil add hole, oil out hole and oil gauge. Mineral lubrication oil ISO VG460 has been filled in enough, before using, user must pull out the rubber ring of vent plug. After the first 500 hours running, clean the interior box and change new oil in it. Then change the oil once per 5000 hours.

6.4.5 The permitted temperature of the oil in reducer is 95℃. If up to this value, it must be stopped and checked.

6.4.6 When the ambient temperature is 5℃ upper or lower than the normal level stated in the table, please cont act with us.

7. 油品润滑 Lubricant

7.1 润滑油选用表 Lubricant oil chosen table

减速机规格 Reducer size	25~90	110~150	
润滑油类型 Type of lubrication oil	合成润滑油 Synthetic lubrication oil	矿物润滑油 Mineral lubrication oil	
环境温度℃ Ambient temperature	-25~+50	-5~+40	-15~+25
ISO VG	ISO VG 320	ISO VG 460	ISO VG 220
AGIP	TELIUM VSF320	BLASIA 460	BLASIA 220
SHELL	TIVELA S320	TIVELA S460	TIVELA S220
ESSO	S220	SPARTAN EP460	SPARTAN EP220
MOBIL	GLYGOYLE HE320	MOBIL GEAR 630xP	MOBIL GEAR 630xP
CASTROL	ALPHA SYN PG320	ALPHA MAX 460	ALPHA MAX 200
BP	ENERGOL SG-XP320	ENERGOL GR-XP460	ENERGOL GR-XP220

7.2 润滑油注油量(L) Adding Capacity of lubrication oil

规格 Type / 安装型式 Installation	25	30	40	50	63	75	90	110	130	150
B3	0.02	0.01	0.08	0.15	0.3	0.55	1	3	4.5	7
B6 B7								2.5	3.5	5.4
B8								2.2	3.3	5.1
V5								3	4.5	7
V6								2.2	3.3	5.1

8. 故障分析

故障情况	故障原因	解决办法
过热	原动机、减速机、工作机连接不当	调整至适当位置，使三者相联轴线同轴
	超负荷运转	适当调整负荷
	油封过度磨擦	在油封唇口处滴润滑油
	☆ 润滑油过少或过多	按注油方式或调整油量
	☆ 润滑油杂质多或润滑性差	按润滑油选用表更换合适新油
振动	原动机、减速机、工作机固定不良	查出固定不良部位，正确固紧
	蜗轮副齿部磨耗或损伤	更换蜗轮副(需要时本公司配合)
	轴承磨损	更换轴承
	螺栓松脱	固紧螺栓
杂音	原动机与减速机连接不当	原动机重新调整连接
	轴承损伤或间隙过大	更换轴承
	蜗轮副啮合不良	修整齿面或更换蜗轮副(请与本公司联系)
	☆ 润滑油不足	按注油方式或补加润滑油
漏油	油封唇口磨损	更换油封
	油封档轴颈磨损	更换输入轴或带轮轴蜗轮
	放油螺塞未旋紧	螺纹处加密封胶、旋紧螺塞
蜗轮副齿面磨损过快	油标破损	更换油标
	超负荷运转	调整至适当负荷
	☆ 润滑油不符合要求	更换合适的润滑油
	☆ 润滑油不足	按油标指示点加足润滑油
	未按规定适时换油，润滑油劣化	按规定要求适时换油
	运转温度过高	1.按“过热”故障处理 2.采取合适措施，降低环境温度

注：1.☆为换油后出现的故障原因。
2.如果发生其他故障无法解决时，请随时与我们联系，以便提供咨询服务。

8. Malfunctions Analysis

Fault Descripiton	Reasons	Solutions
Overheating	Improper connection among prime mover, reducer and the operation device	Adjust to proper position
	Overloading	Adjust to proper load
	Over friction of oil seals	Drop lubricant at oil seal
	☆Lubricant oil overmuch or shortage	Adjust to proper oil quantity as lubricant capacity table
	☆Much impurity in oil or inferior oil	Refill proper oil
Vibration	Prime mover, reducer and the operation device mount badly	Find out the bad place,tighten it
	Tooth surface of worm gear sets worn-out or damaged	Replace worm gear sets(we will cooperate with you when necessary)
	Bearing worn-out	Replace Bearing
	Bolt loose	Tighten Screw
Noise	Improper connection among prime mover, reducer and the operation device	Adjust to proper position
	Bearing damaged or too large clearance	Replace Bearing
	Worm gear sets mesh badly	Mend tooth surface or replace worm gear sets (please contact to us)
	☆Lubricant oil shortage	Fill in adequate oil as lubricant capacity table
Oil leakage	Oil seal lip worn-out	Replace oil seal
	Shaft of oil seal area worn-out	Replace input or output shaft with worm gear
	Oil screw plug loose	Tighten oil screw plug
Tooth surface of worm gear sets abrade extra-quickly	Oilgauge damaged	Replace oil gauge
	Overload	Adjust to proper loading
	☆Lubricant oil not according with requirement	Replace proper lubricant oil
	☆Lubricant oil shortage	Fill adequate oil as indication
	Not replacing lubricant oil in time according to requirement, oil deteriorates	Replacing oil in time according to requirement
	Overheating while running	1. Deal with it as "Overheating" 2. Adopting proper measures to make environment temperature fall

Annotale:1.☆Accored after the lubricant changed.
2. If other faults not listed above occur, Please contact with us at any moment, Our company will supply thorough consultation and service.

YDHN 一鼎华耐 轻松传动每一秒 www.yd-reducer.com
专业蜗轮蜗杆减速机制造商 Specialized manufacturer of worm gear reducer